LEGO TECHNIC

42178

LEGO® Builder

LEGO.com/sustainable-packaging

FR

DONNEZ OU RECYCLEZ

ASSOCIATION OU MAGASIN OU DÉCHÈTERIE

Adresses sur quefairedemesdechets.fr

LEGO® Builder

BUILDER

Download on the App Store | GET IT ON Google Play | 腾讯应用宝

Apple and the Apple logo are trademarks of Apple Inc., registered in the U.S. and other countries and regions. App Store is a service mark of Apple Inc. Google Play and the Google Play logo are trademarks of Google LLC. Tencent and the Tencent logo are trademarks of Tencent Inc.

LEGO.com/devicecheck

EN Ask parents' permission before going online | **DE** Eltern um Erlaubnis bitten, bevor du online gehst | **FR** Demande l'autorisation d'un parent avant d'aller en ligne | **IT** Chiedi il permesso ai tuoi genitori prima di andare online | **ES** Pídeles permiso a tus papás antes de conectarte a Internet | **PT** Pede autorização aos pais antes de acederes online | **ZH** 上网前应先征得父母的同意 | **PL** Poproś rodziców o zgodę, zanim wejdziesz do Internetu | **CS** Než půjdeš na internet, požádej rodiče o svolení | **SK** Skôr než pôjdeš na internet, vypýtaj si povolenie od rodičov | **HU** Kérj szülői engedélyt, mielőtt online csatlakoznál! | **RO** Cere permisiunea părinților înainte de a te conecta online | **BG** Поискайте разрешение от родител, преди да влезете онлайн | **LV** Pirms došanās tiešsaistē palūdz atļauju vecākiem | **ET** Enne Interneti kasutamist küsi vanematelt luba | **LT** Prieš prisijungdami prie interneto, atsiklauskite tėvų

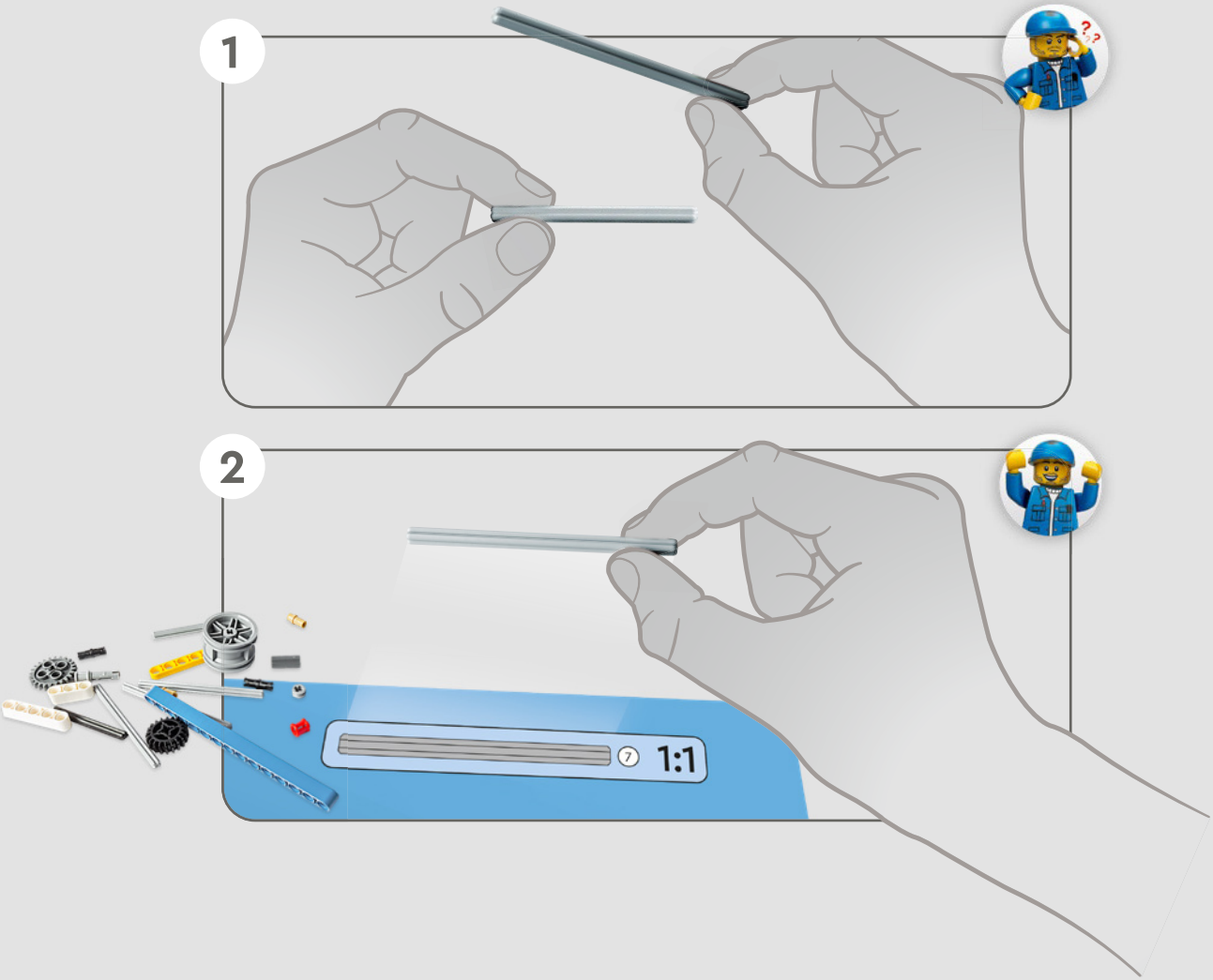
1
2
1:1

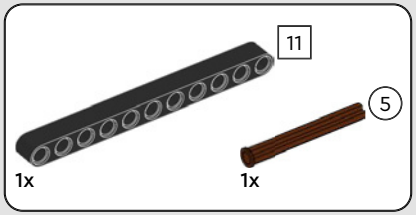

1

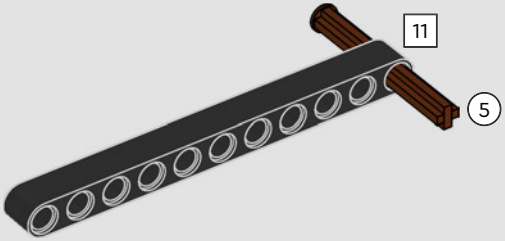

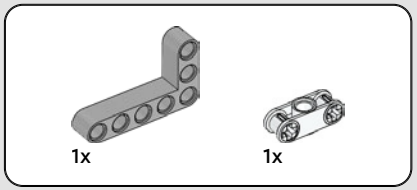

2

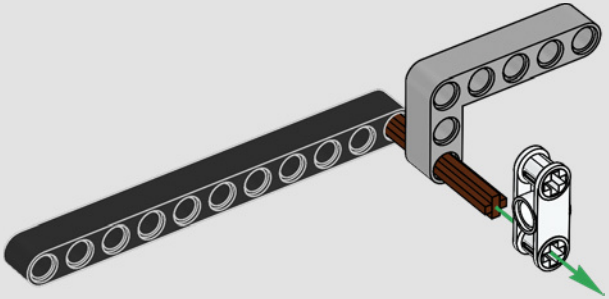

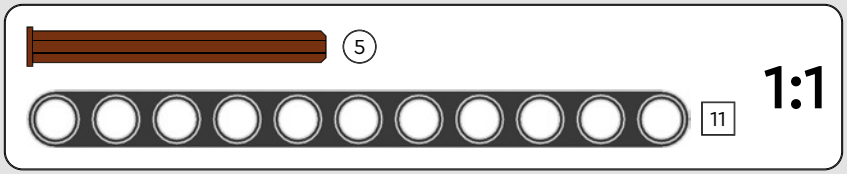

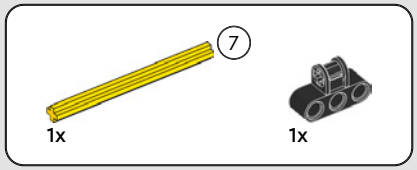

3

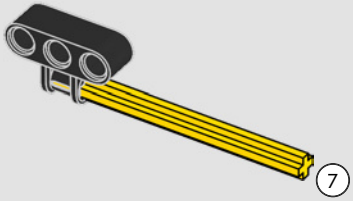

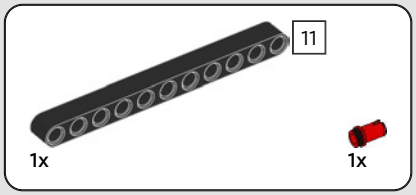

4

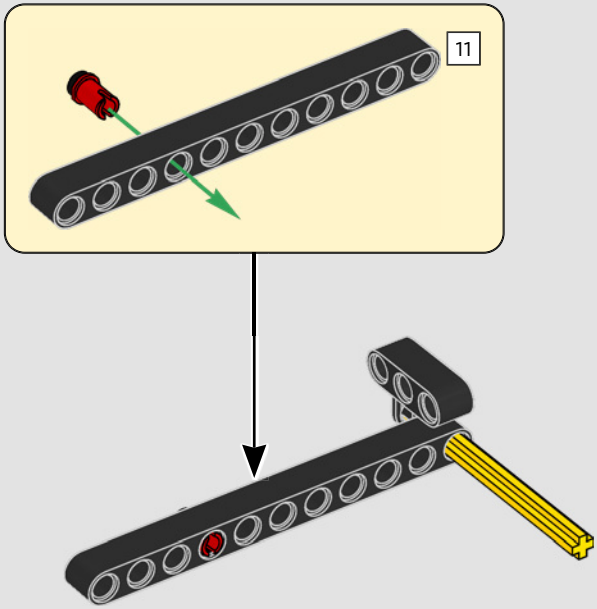

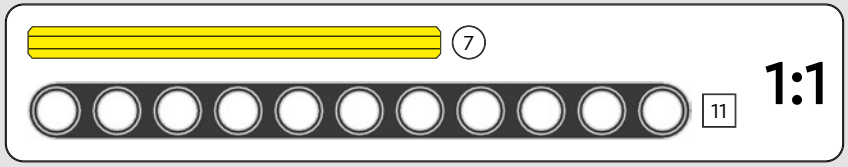

5

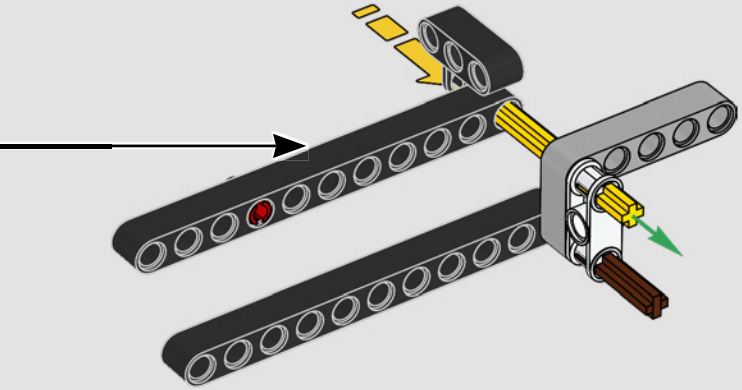

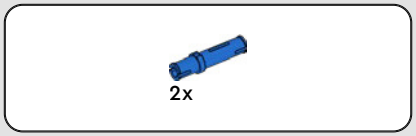

6

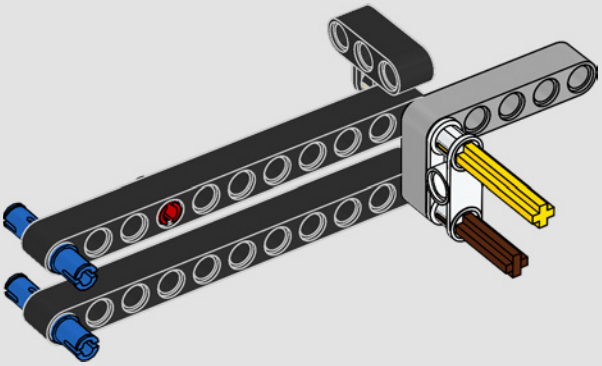

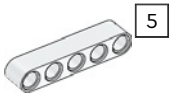

7

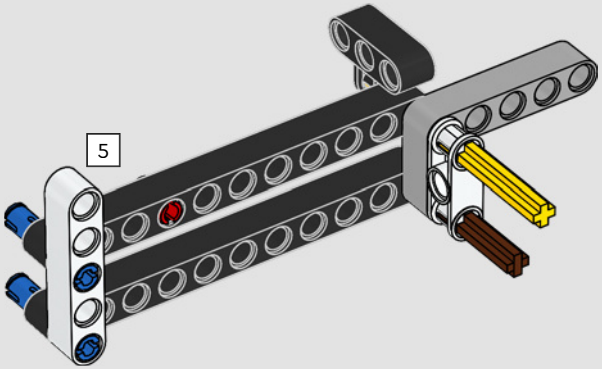

1:1

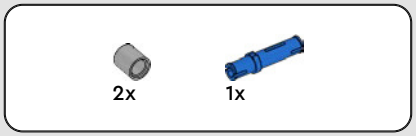

8

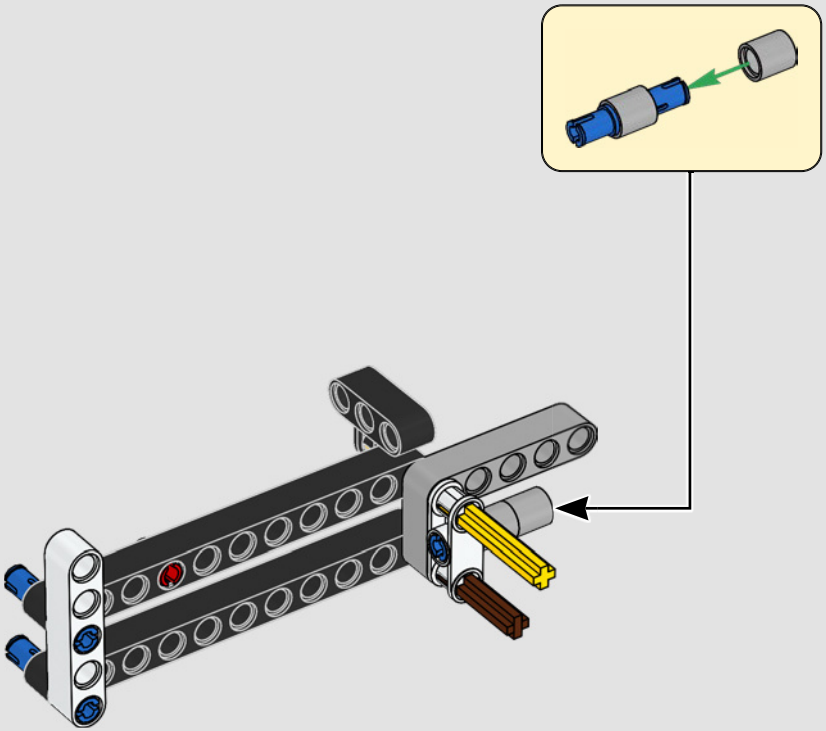

9

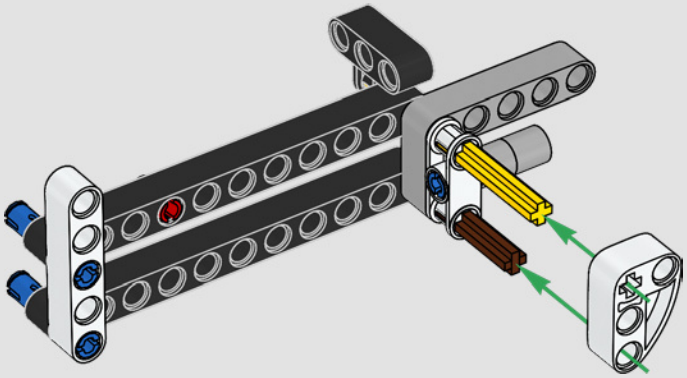

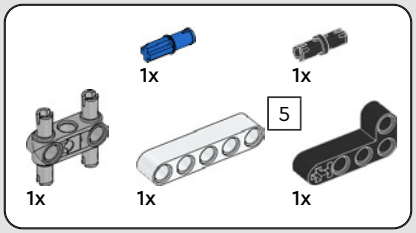

10

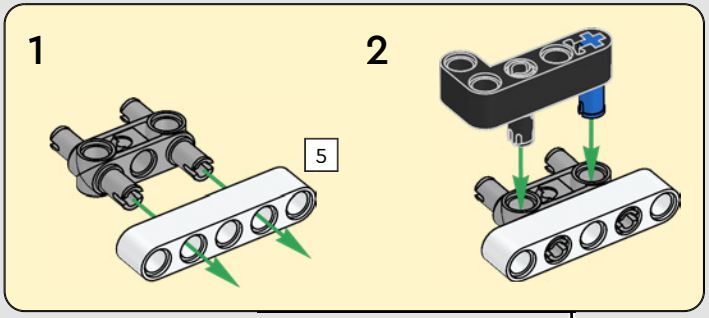

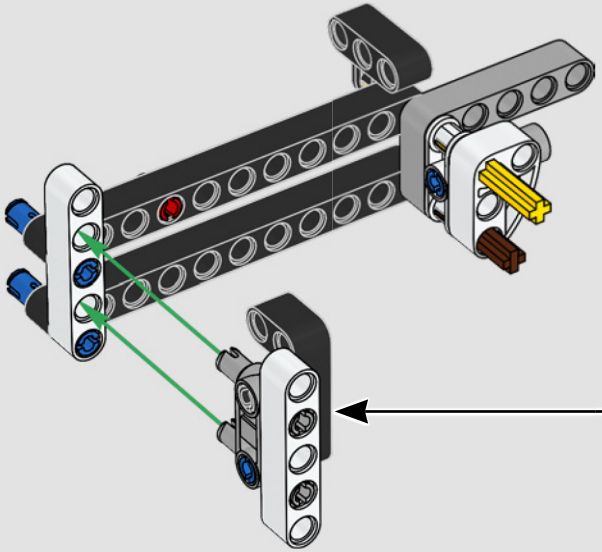

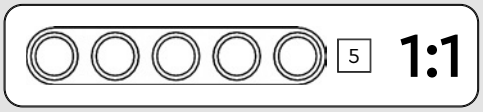

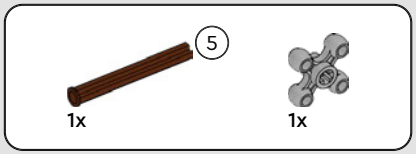

11

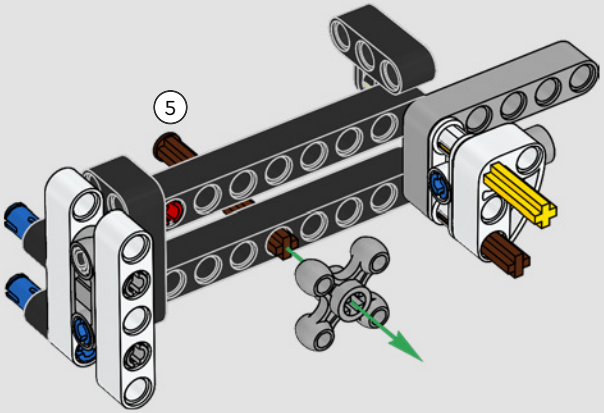

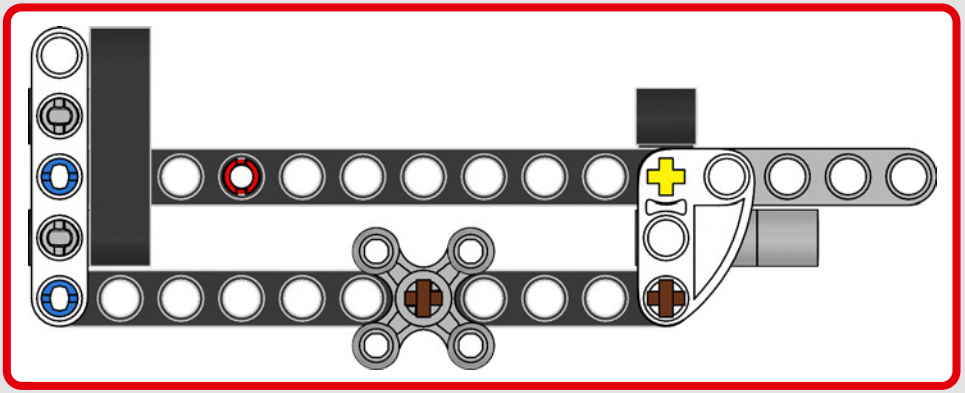

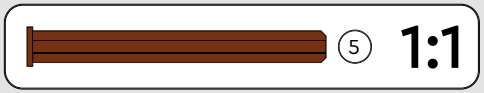

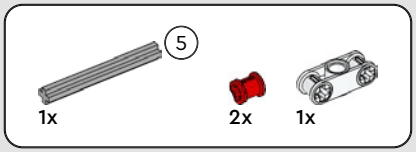

12

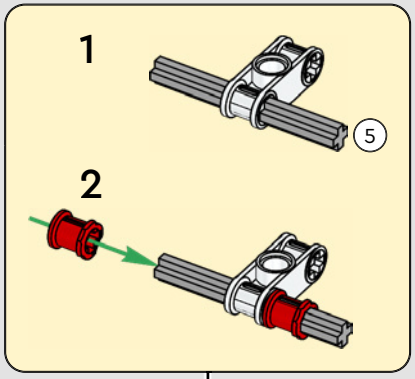

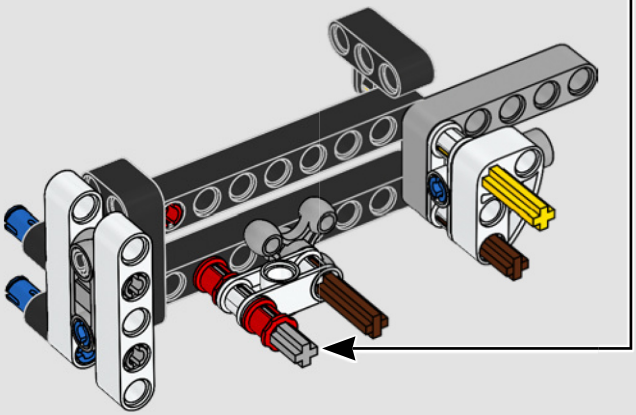

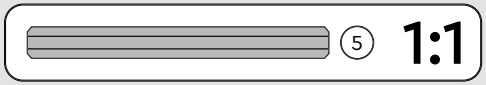

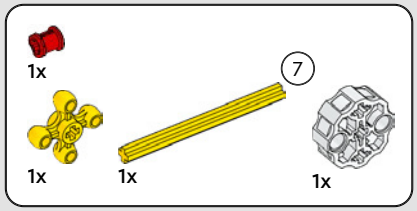

13

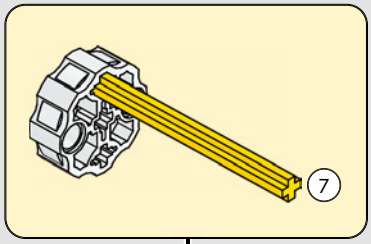

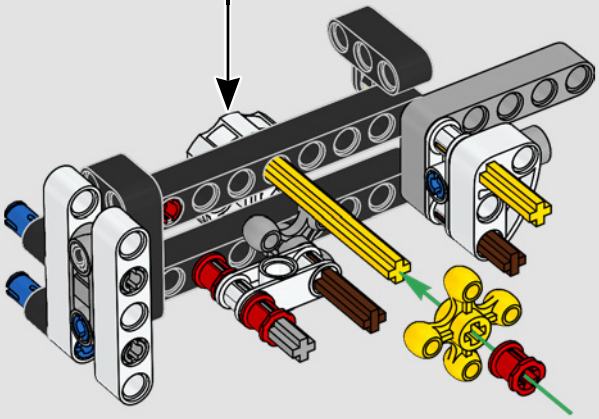

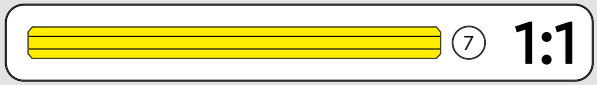

14

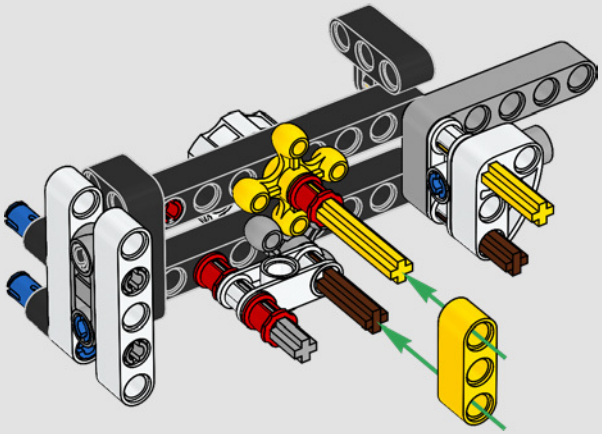

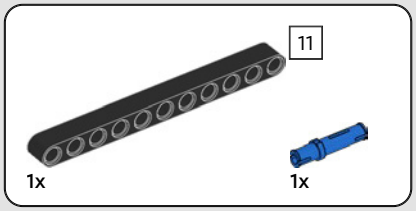

15

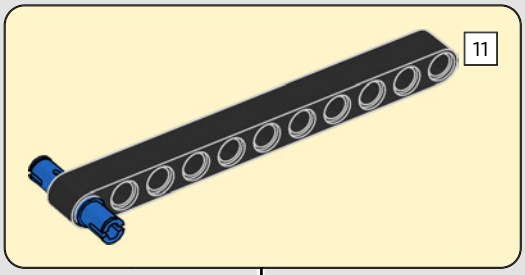

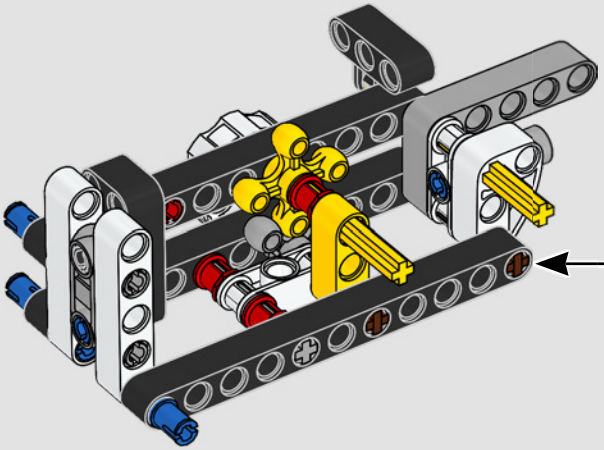

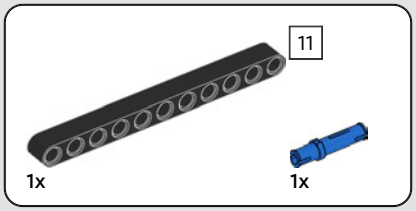

16

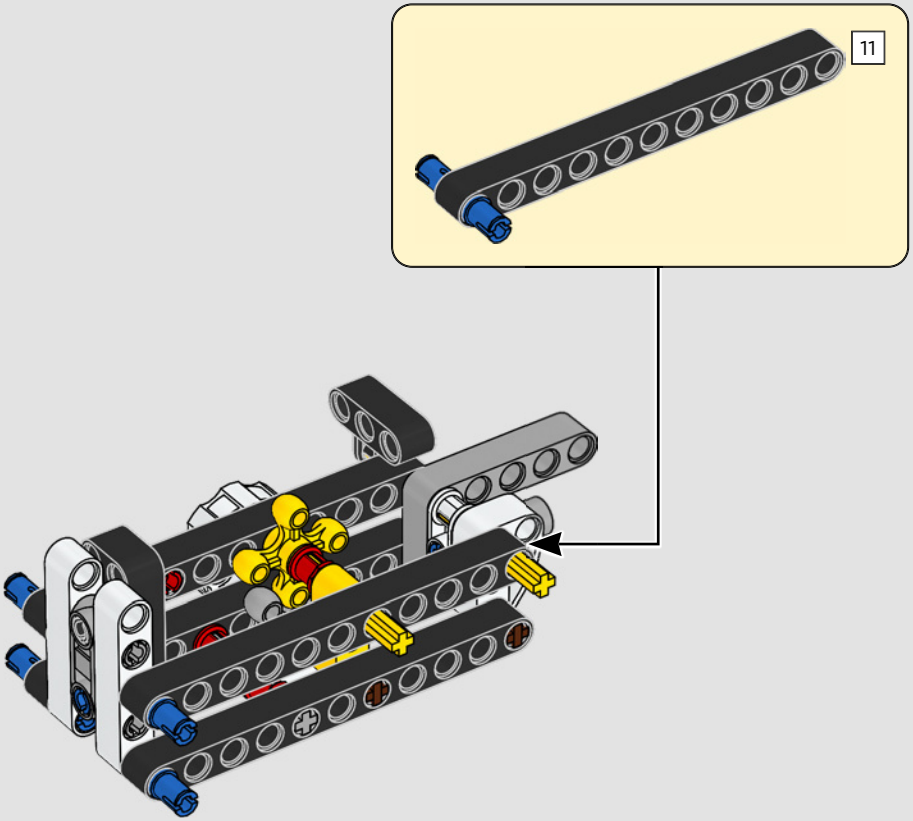

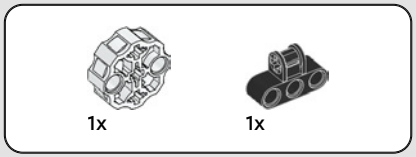

17

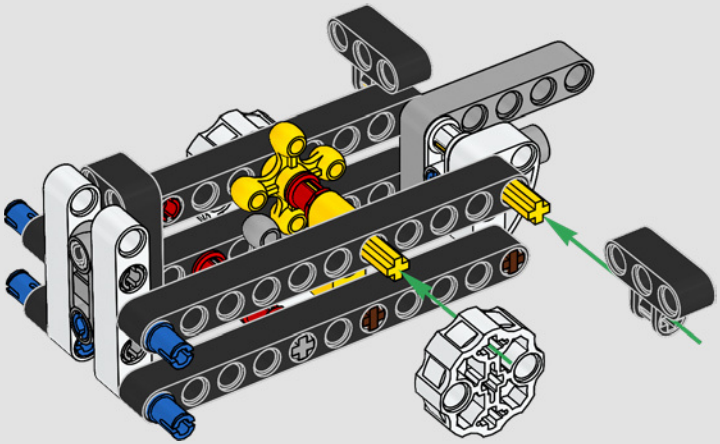

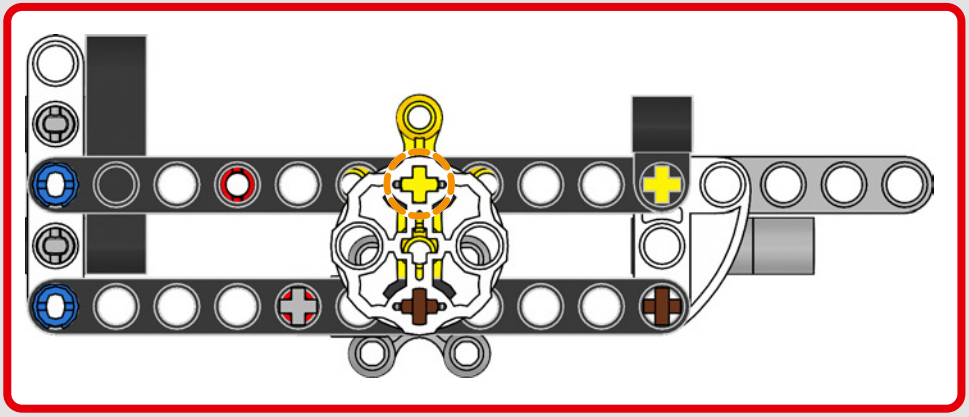

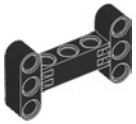

2x

18

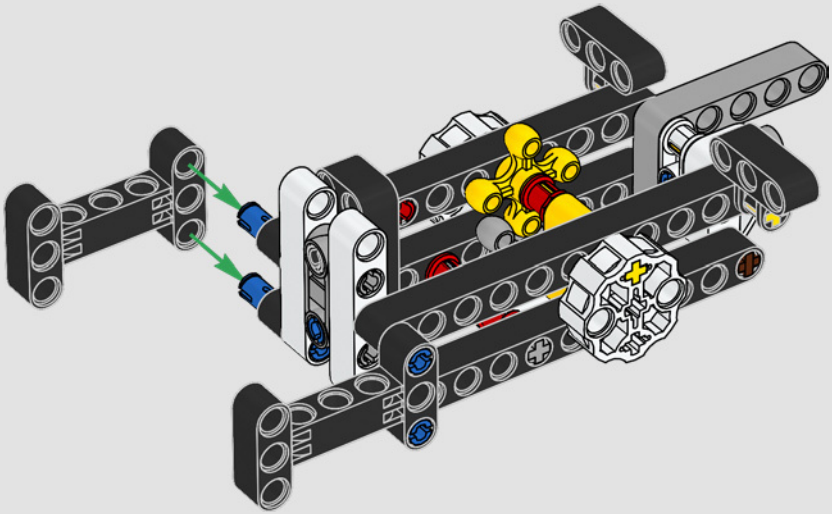

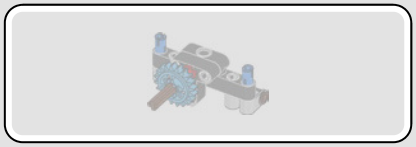

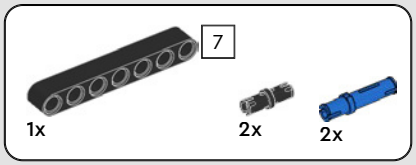

19

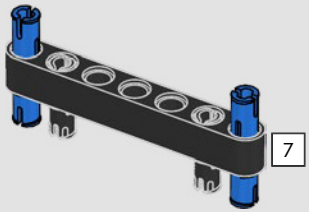

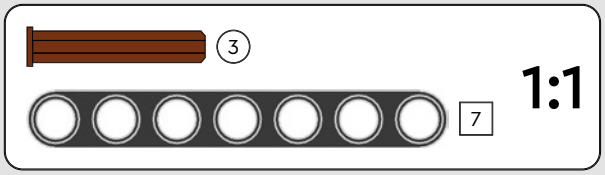

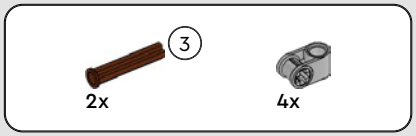

20

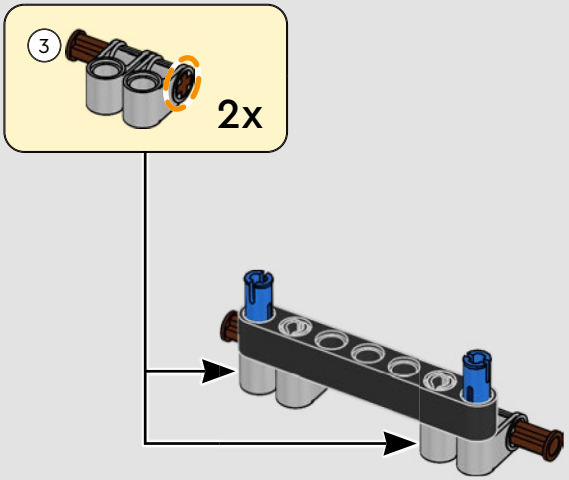

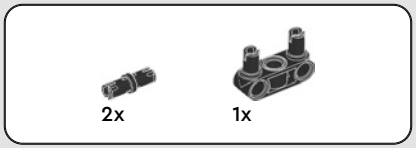

21

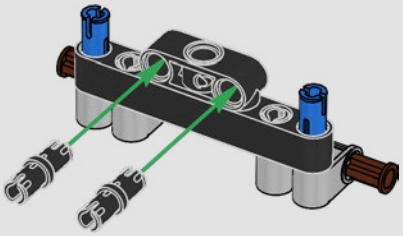

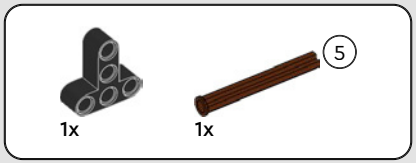

22

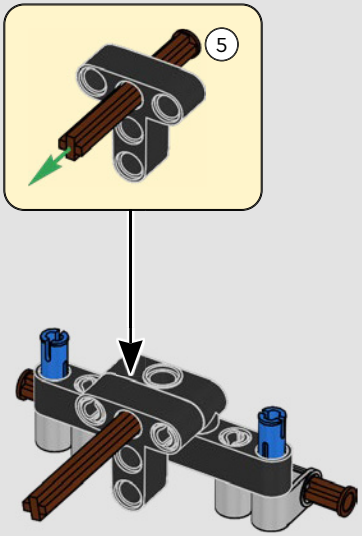

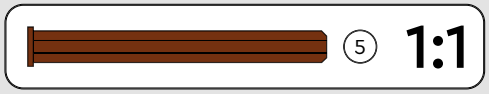

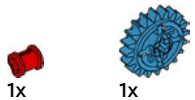

23

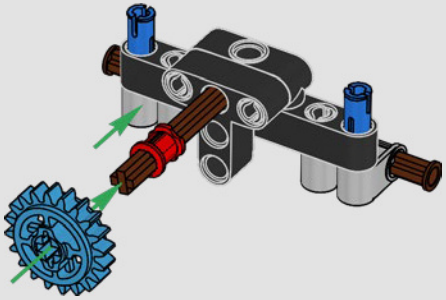

24

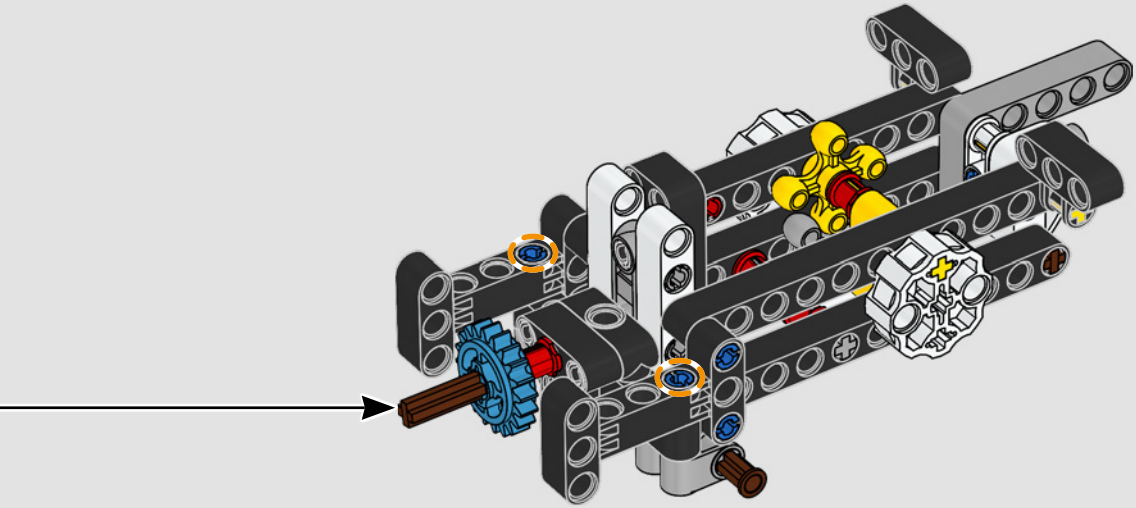

2x

25

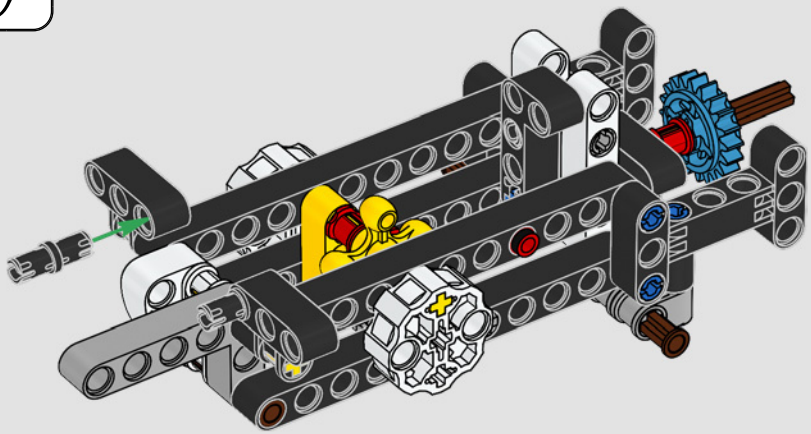

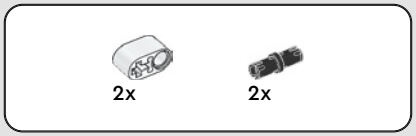

26

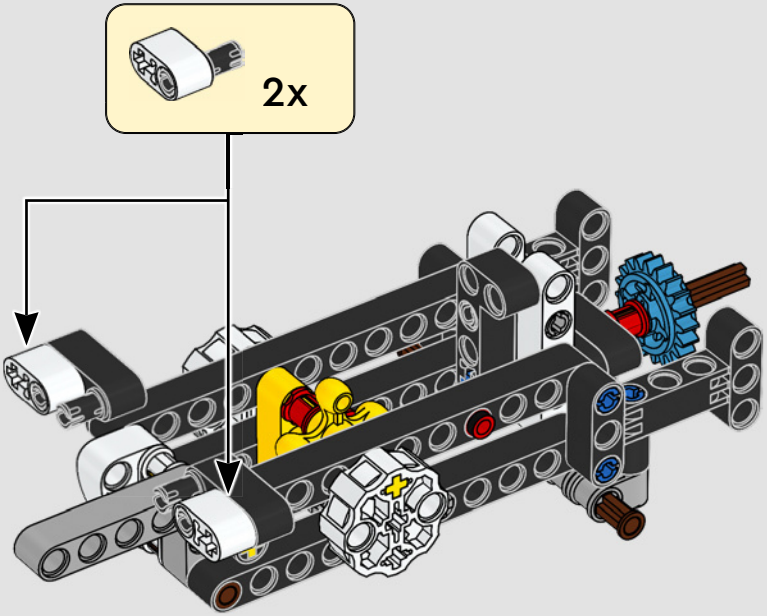

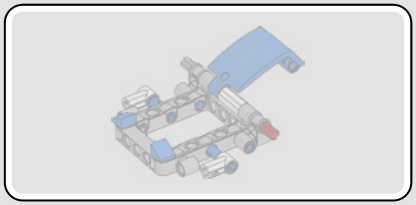

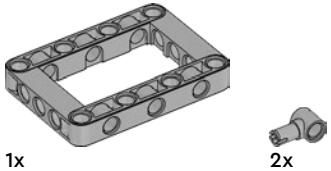

27

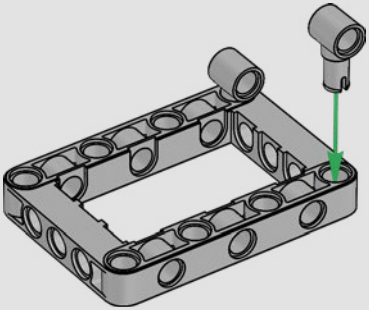

1:1

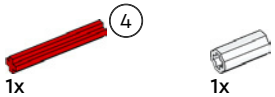

28

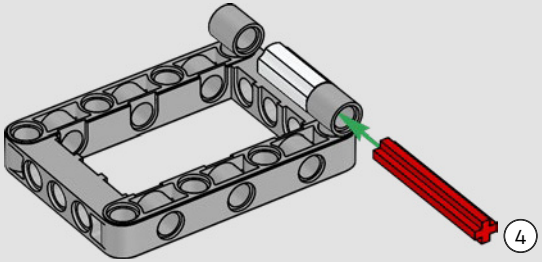

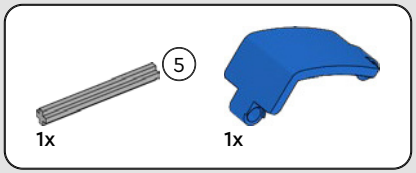

29

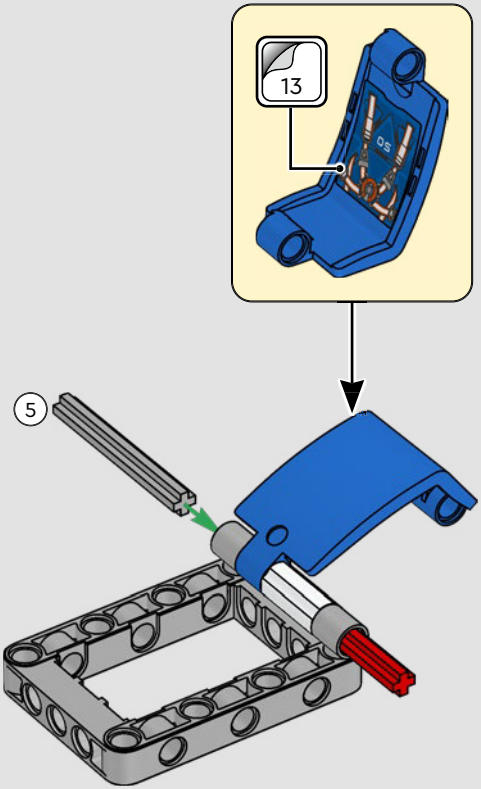

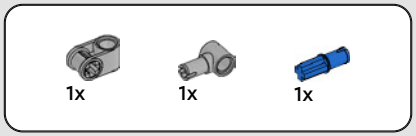

30

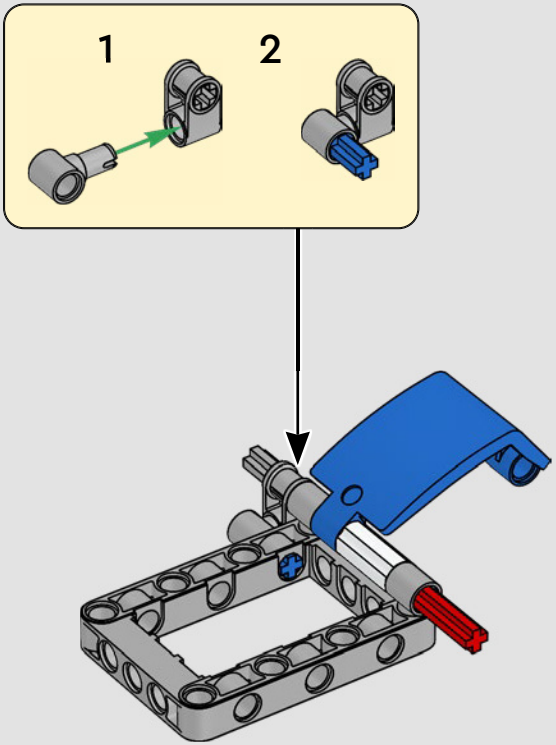

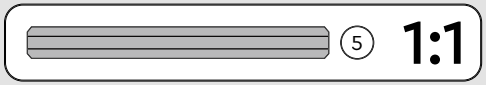

31

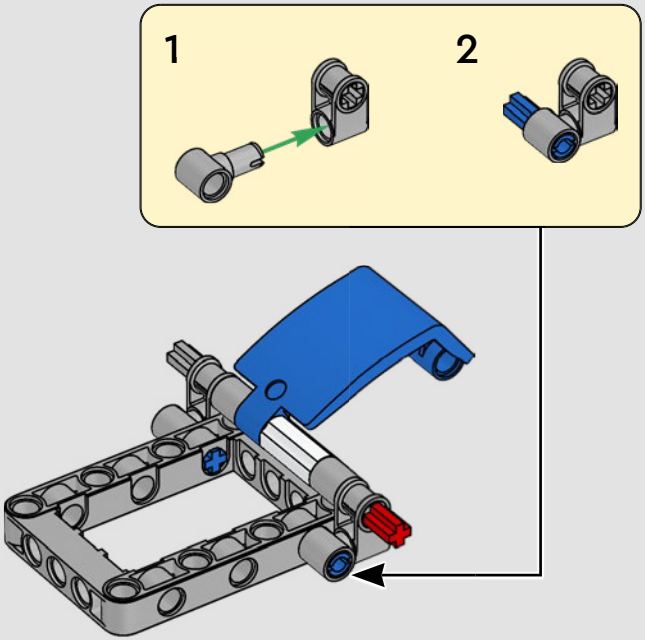

2x

32

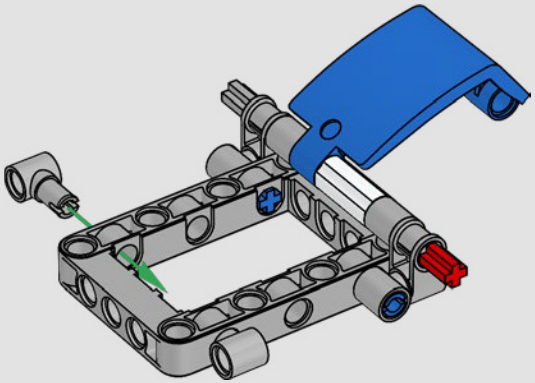

2x

33

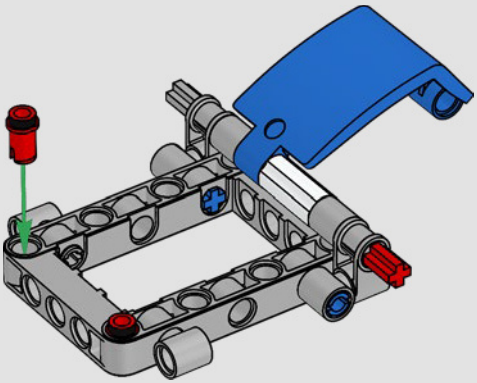

34

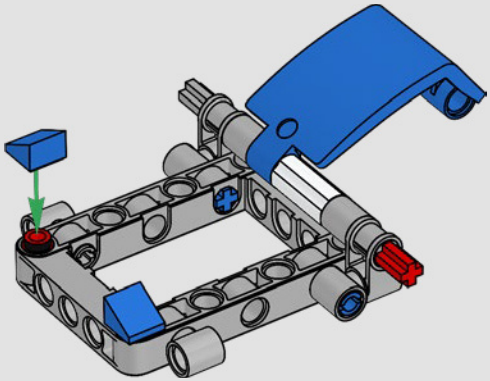

35

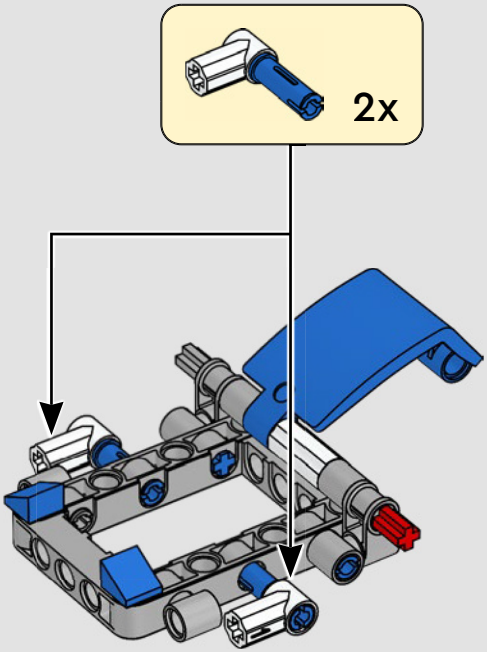

36

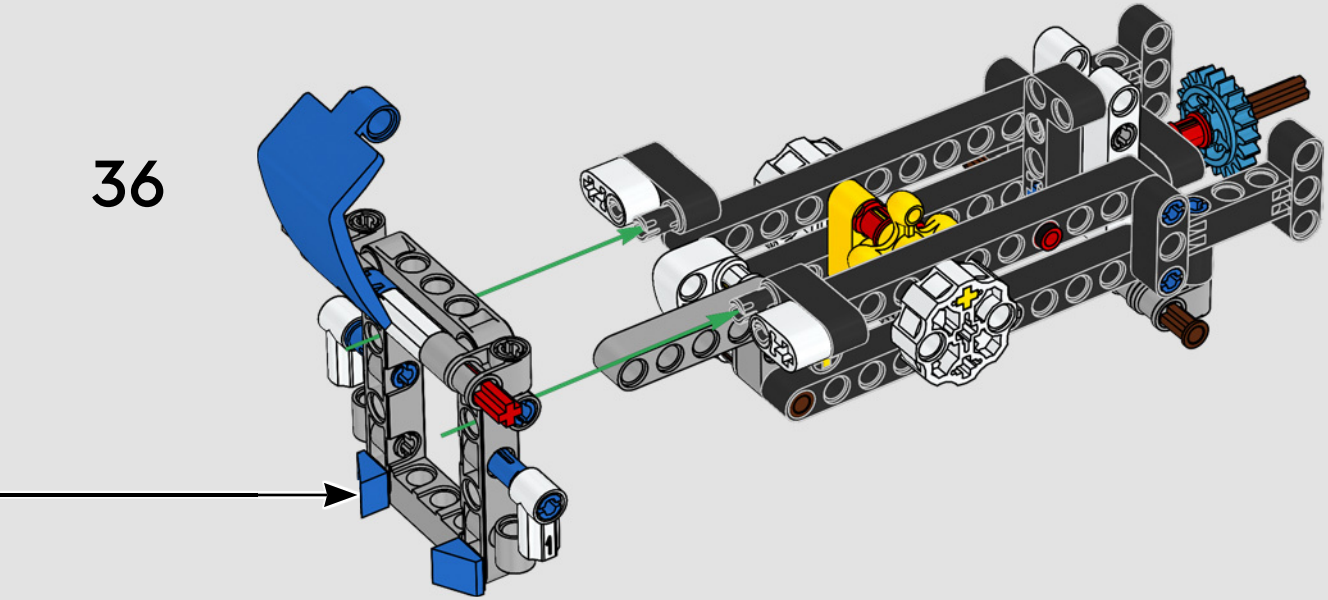

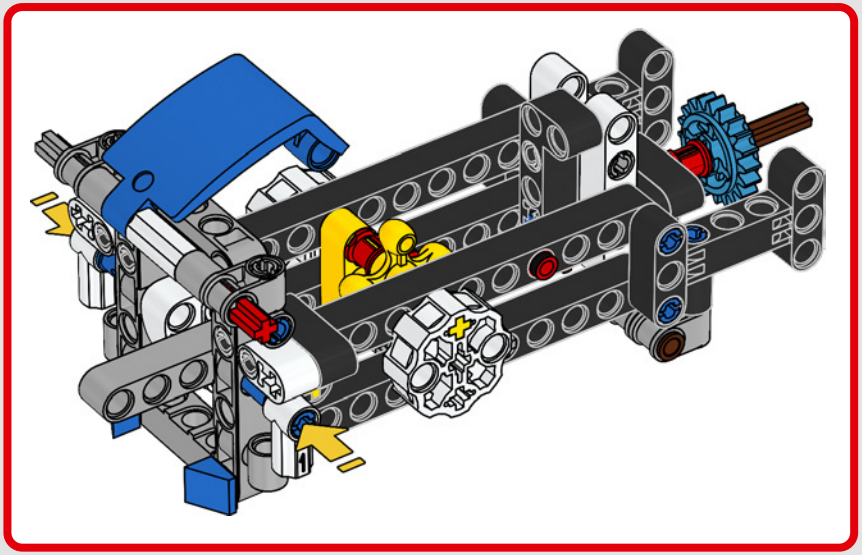

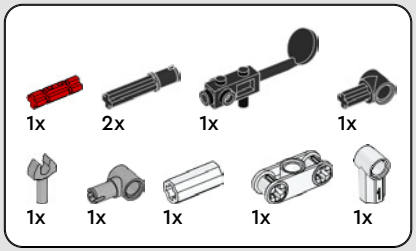

37

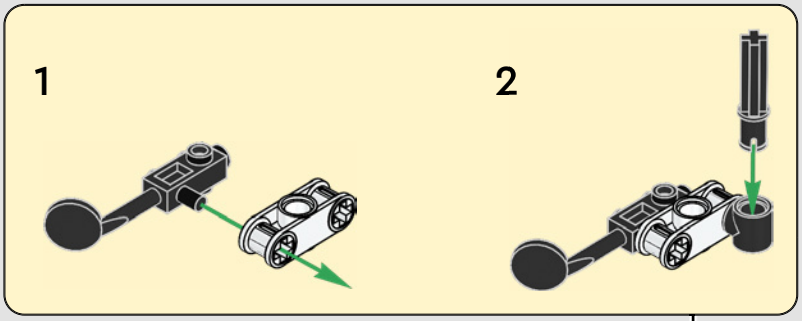

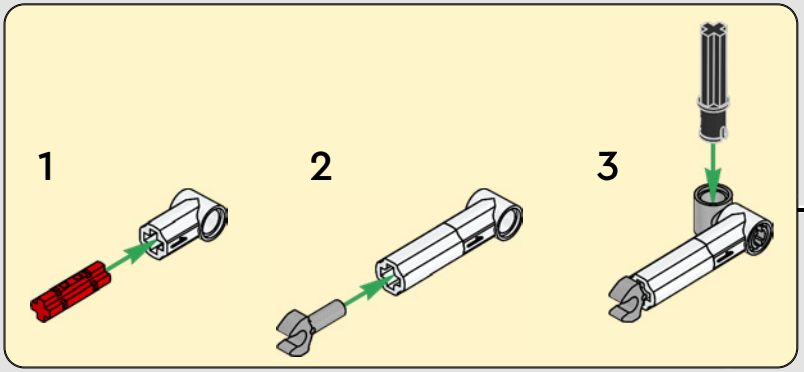

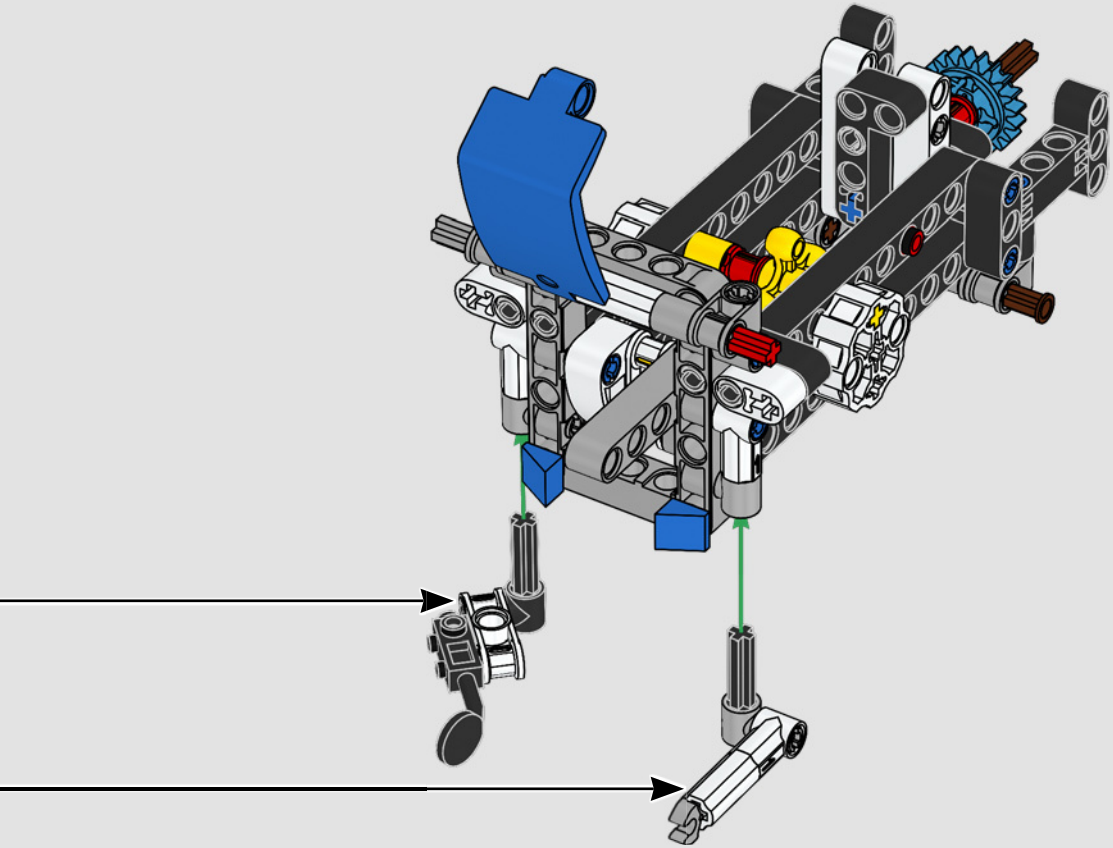

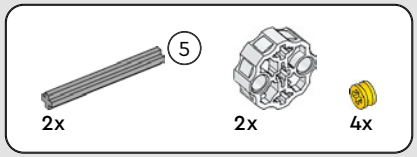

38

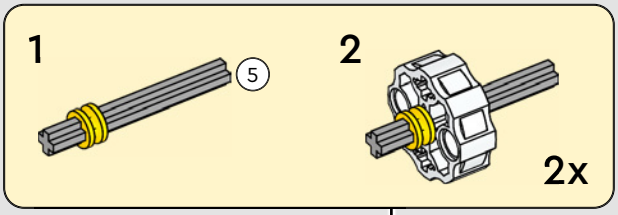

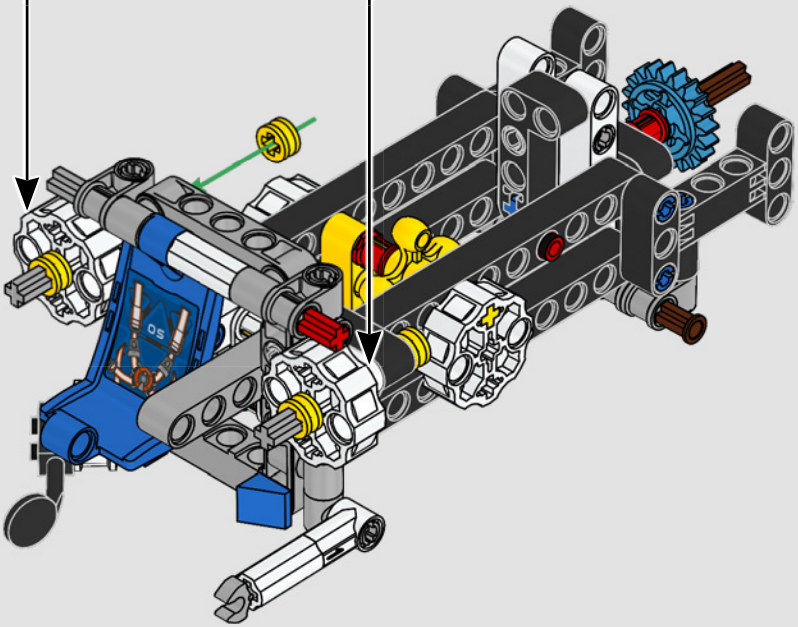

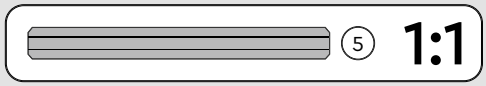

2x

39

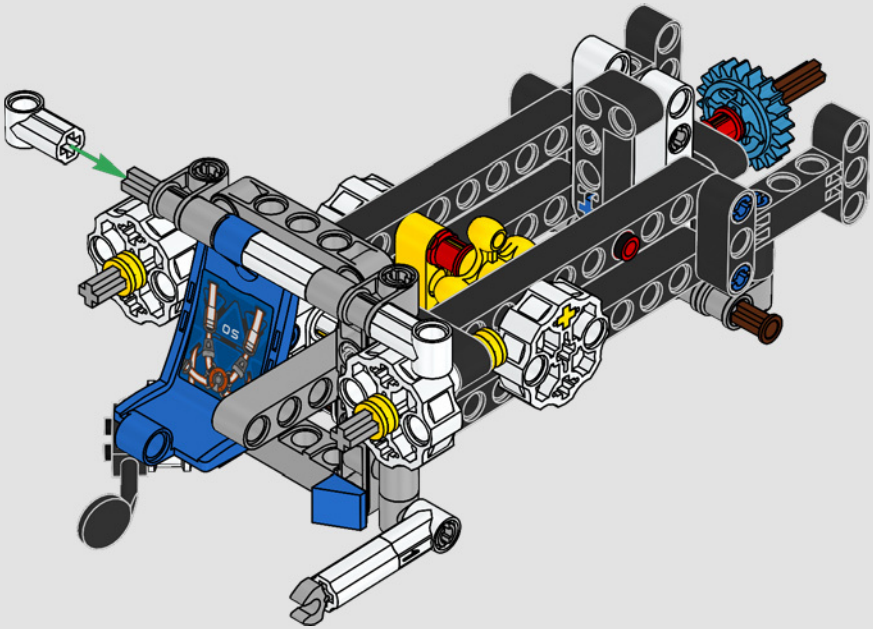

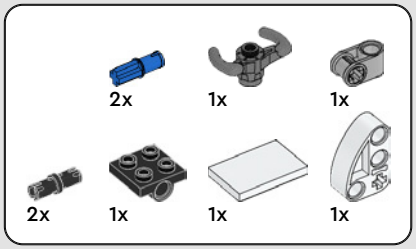

40

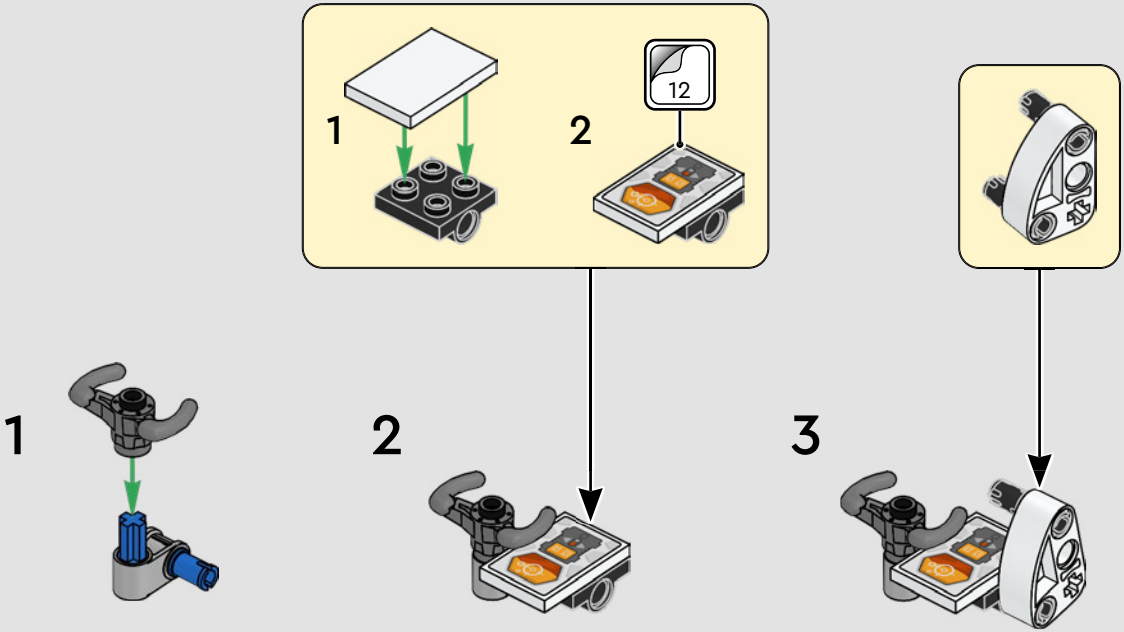

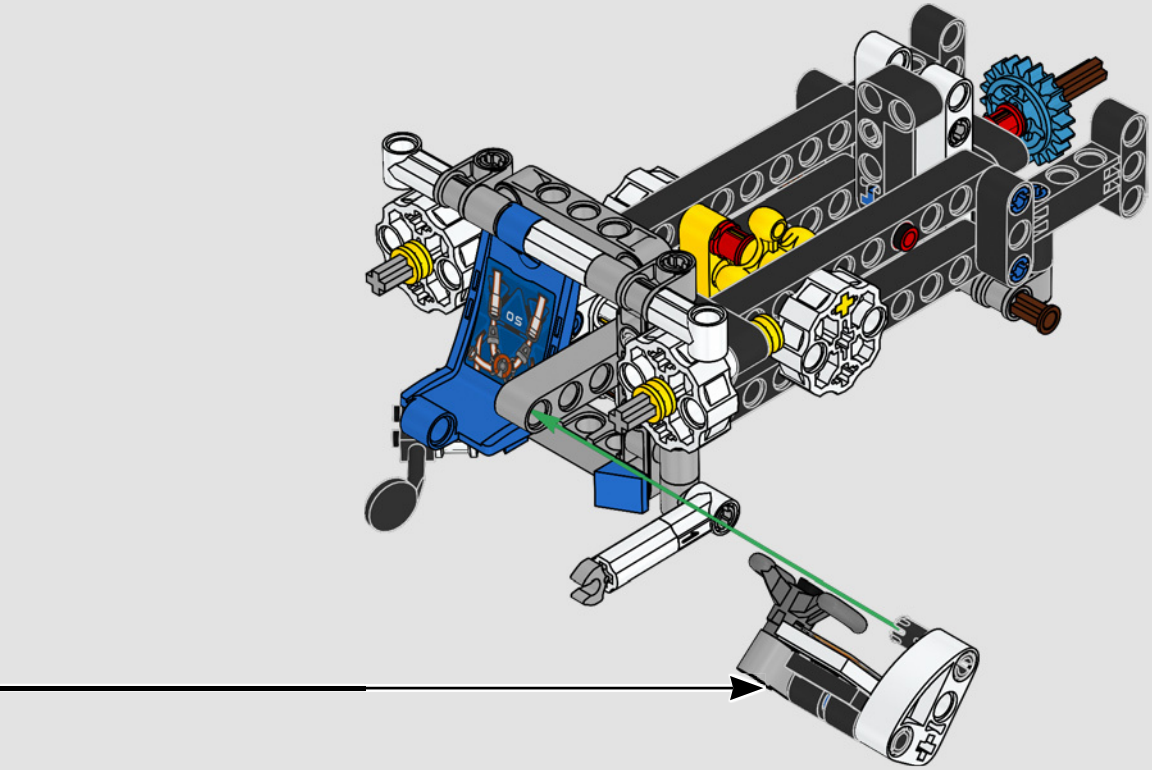

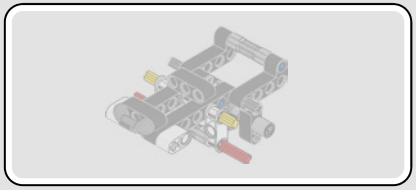

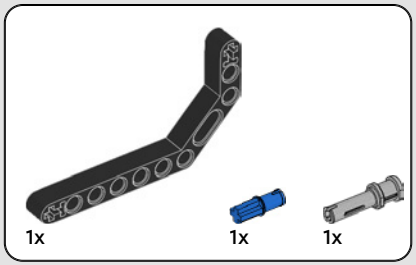

41

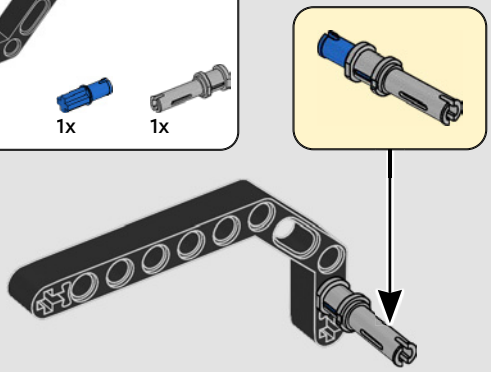

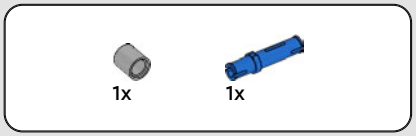

42

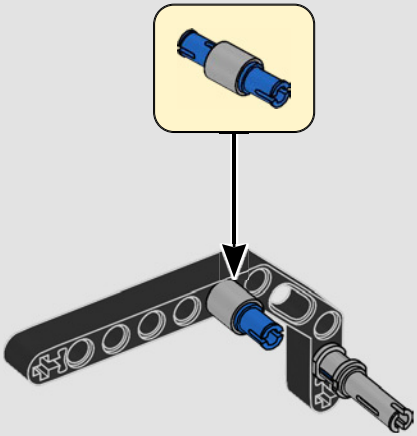

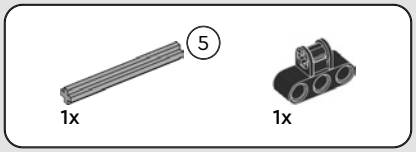

43

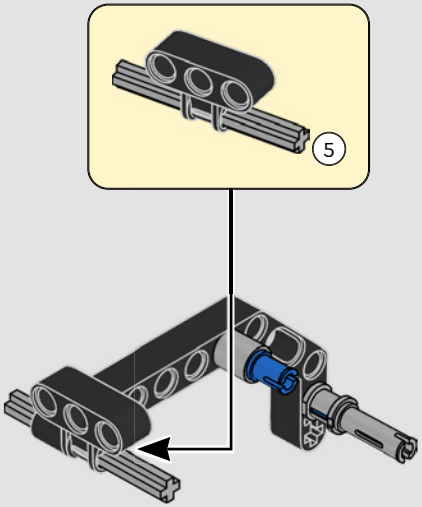

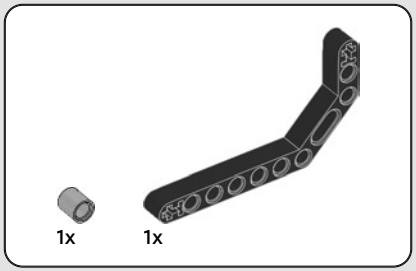

44

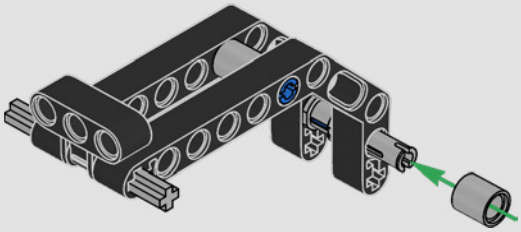

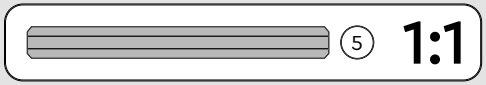

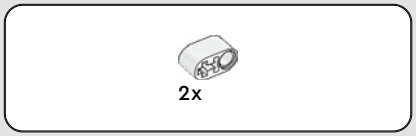

45

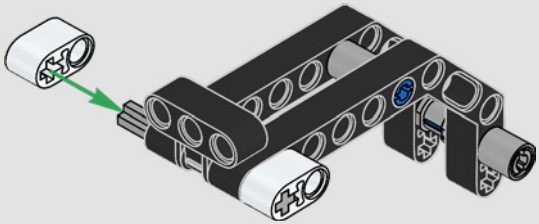

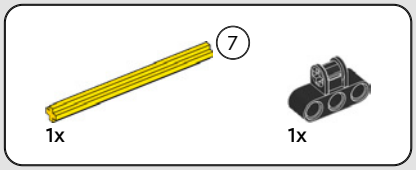

46

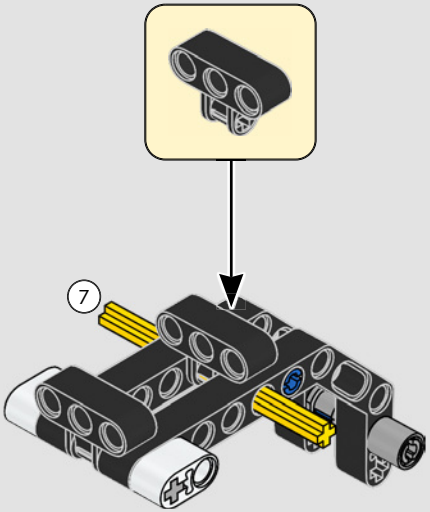

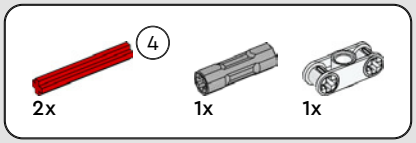

47

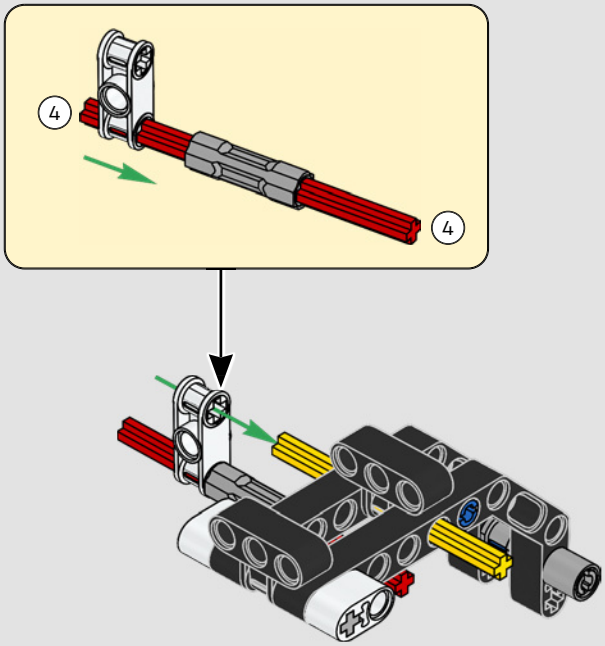

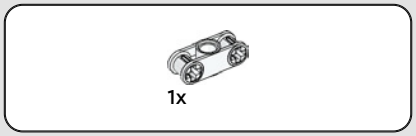

48

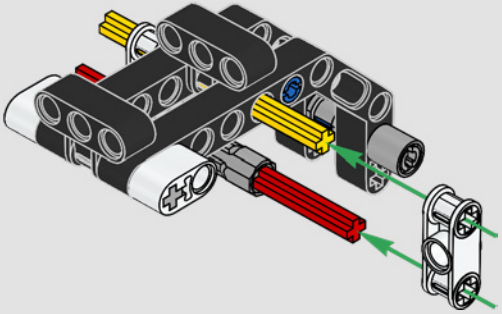

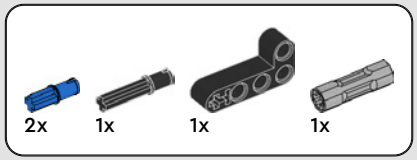

49

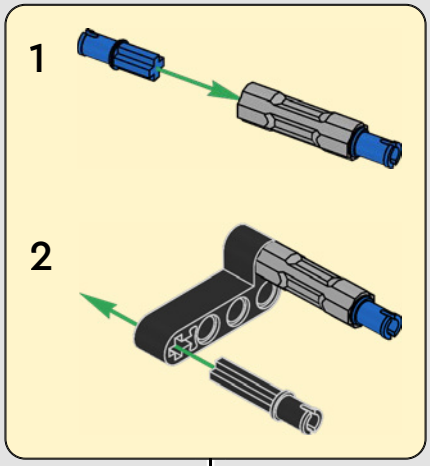

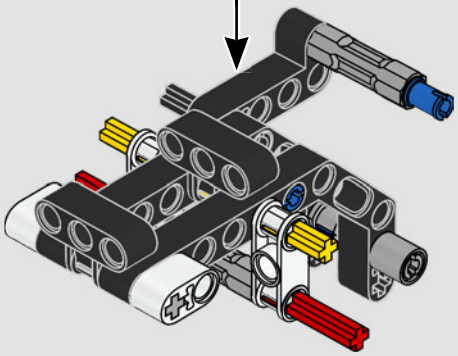

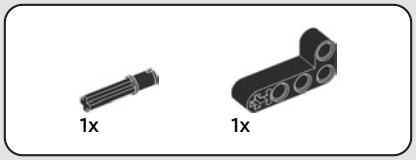

50

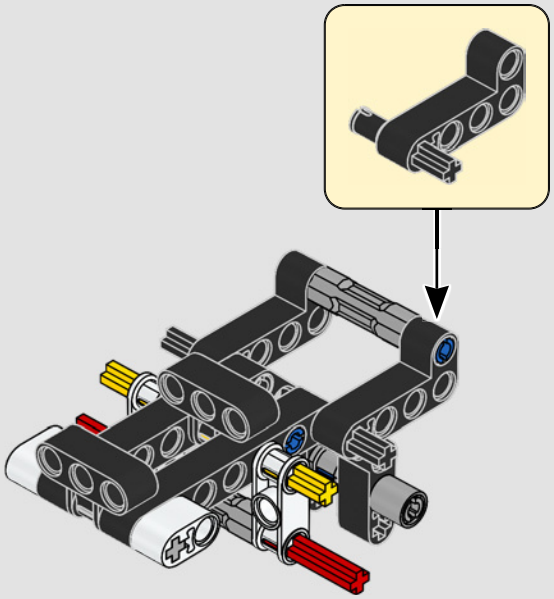

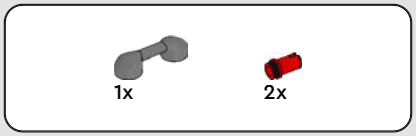

51

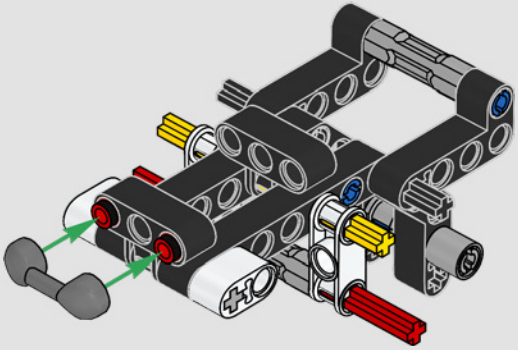

52

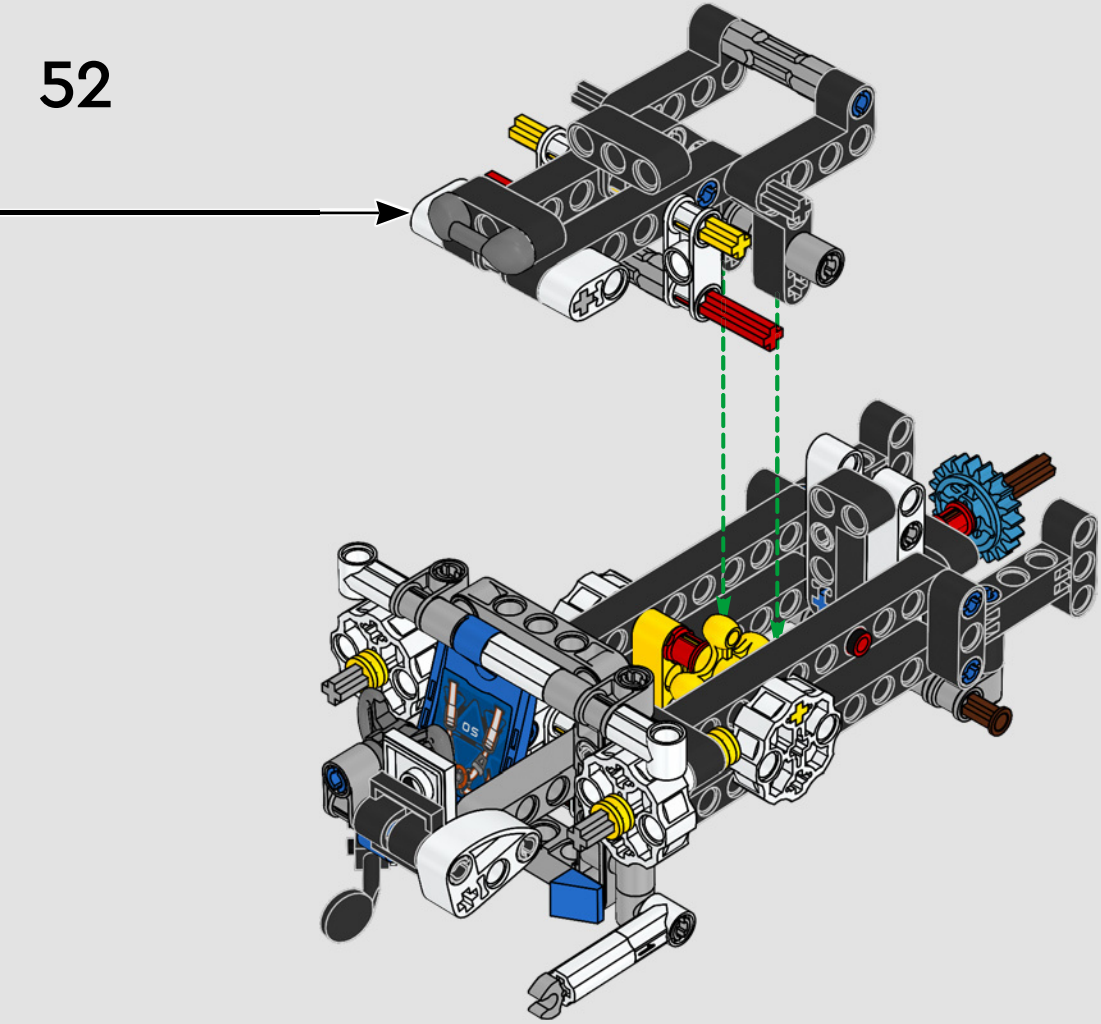

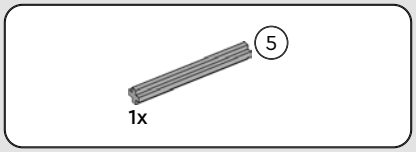

53

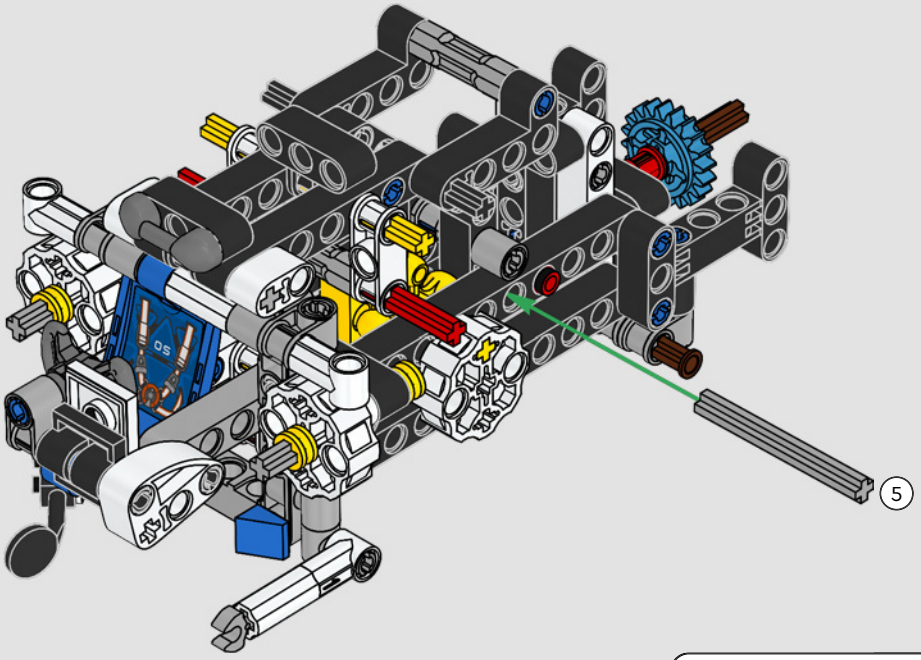

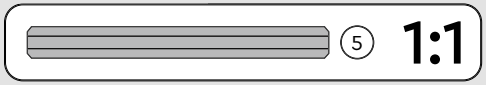

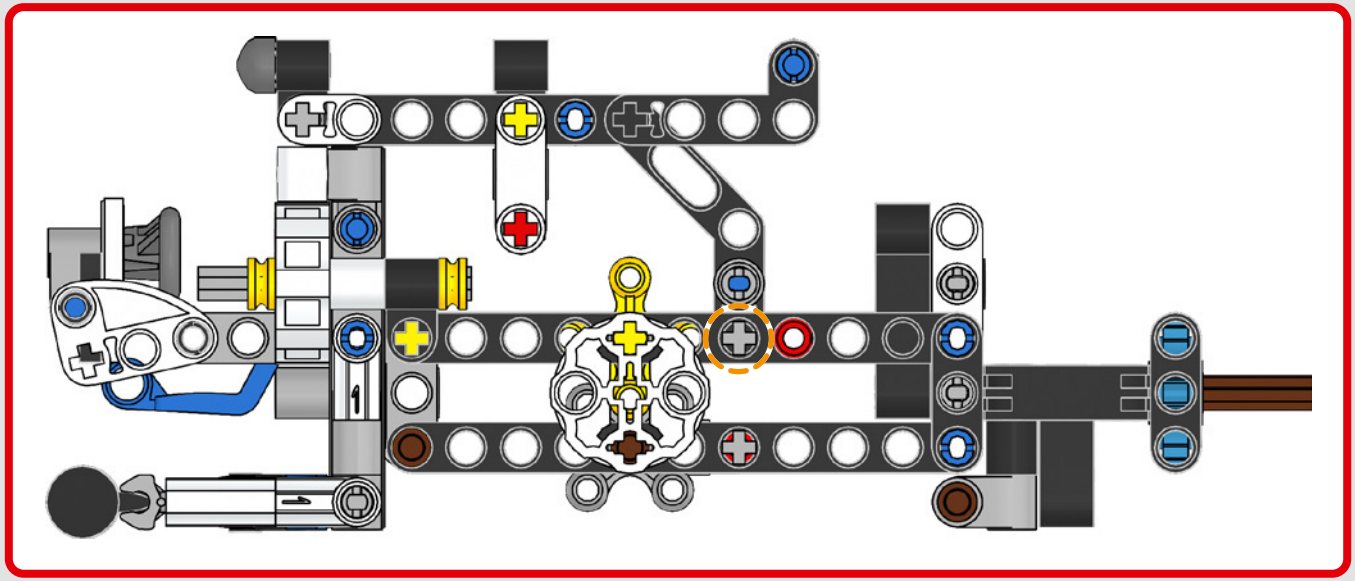

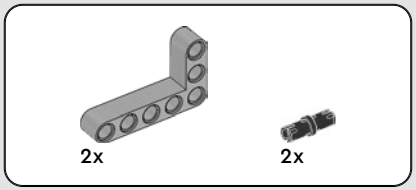

54

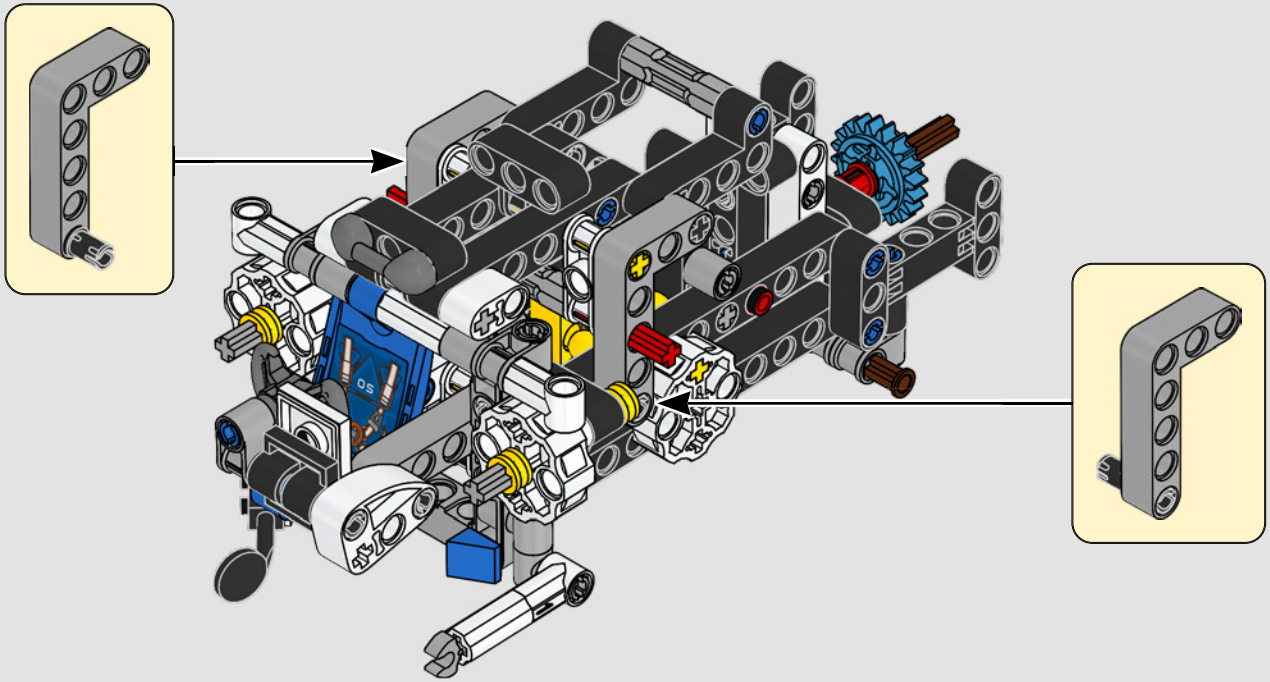

2x

55

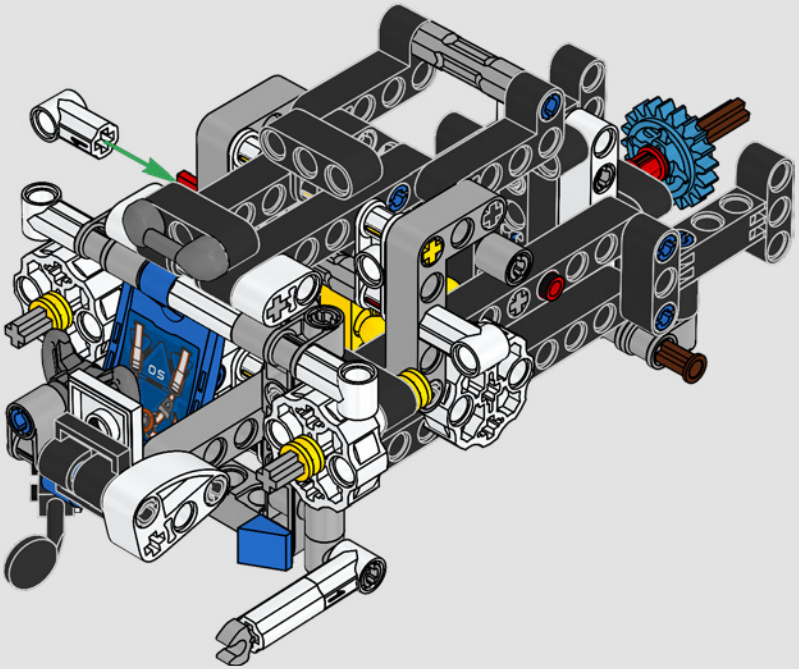

2x

56

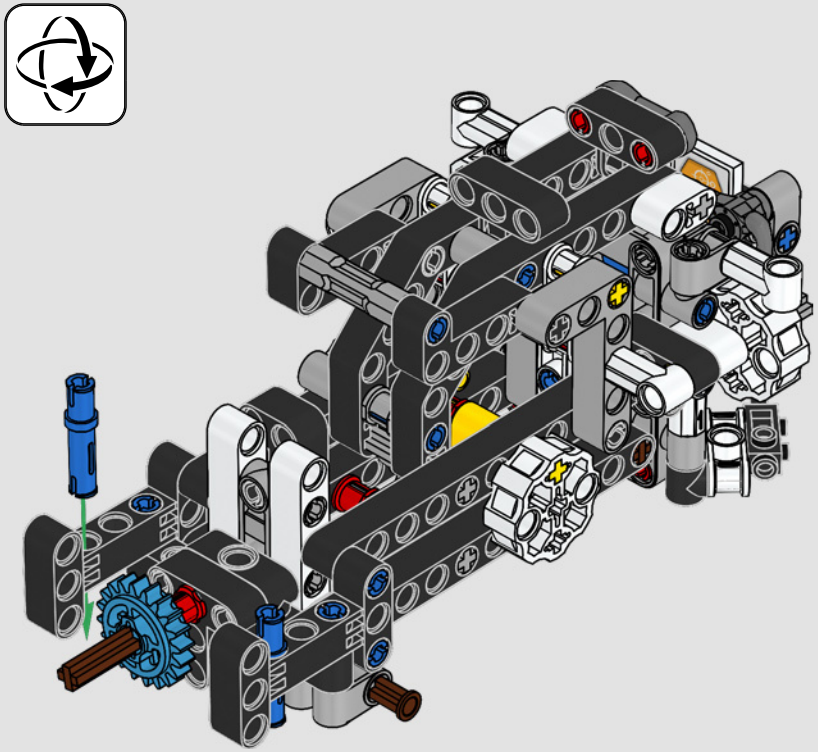

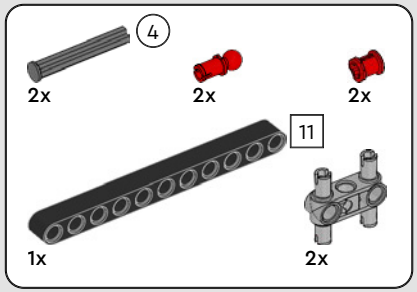

57

1

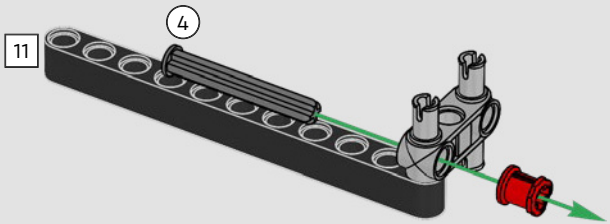

2

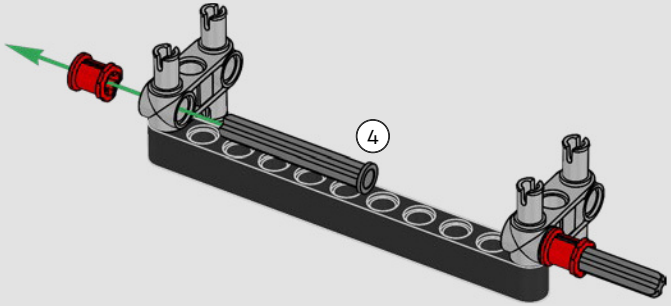

3

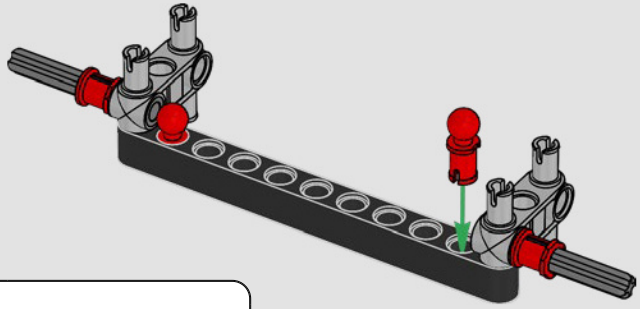

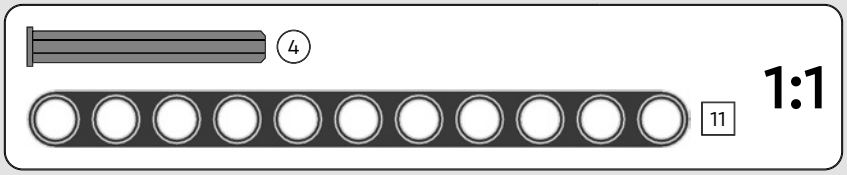

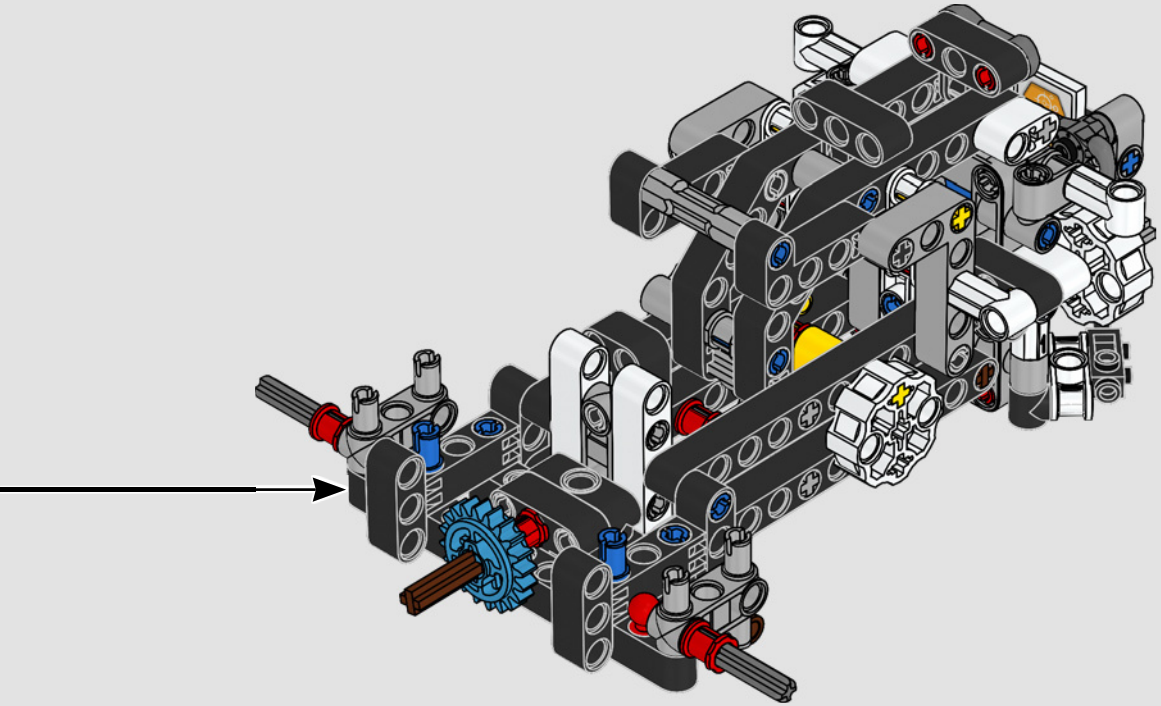

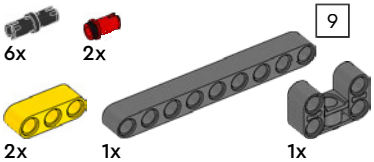

58

1

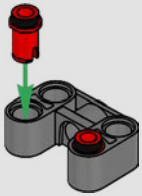

2

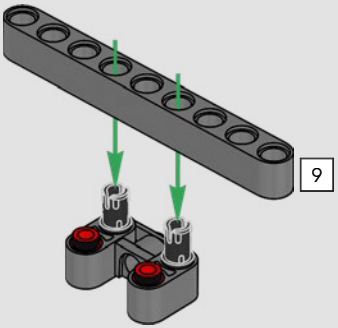

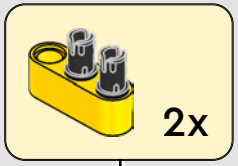

3

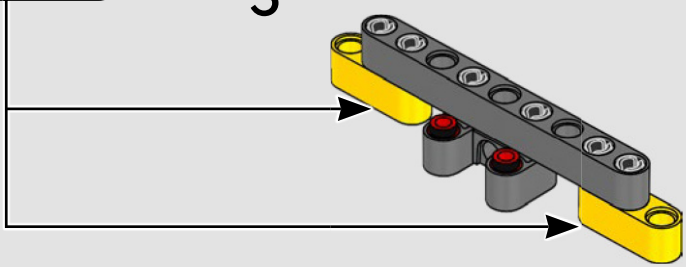

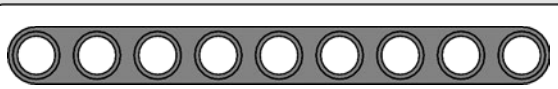

1:1

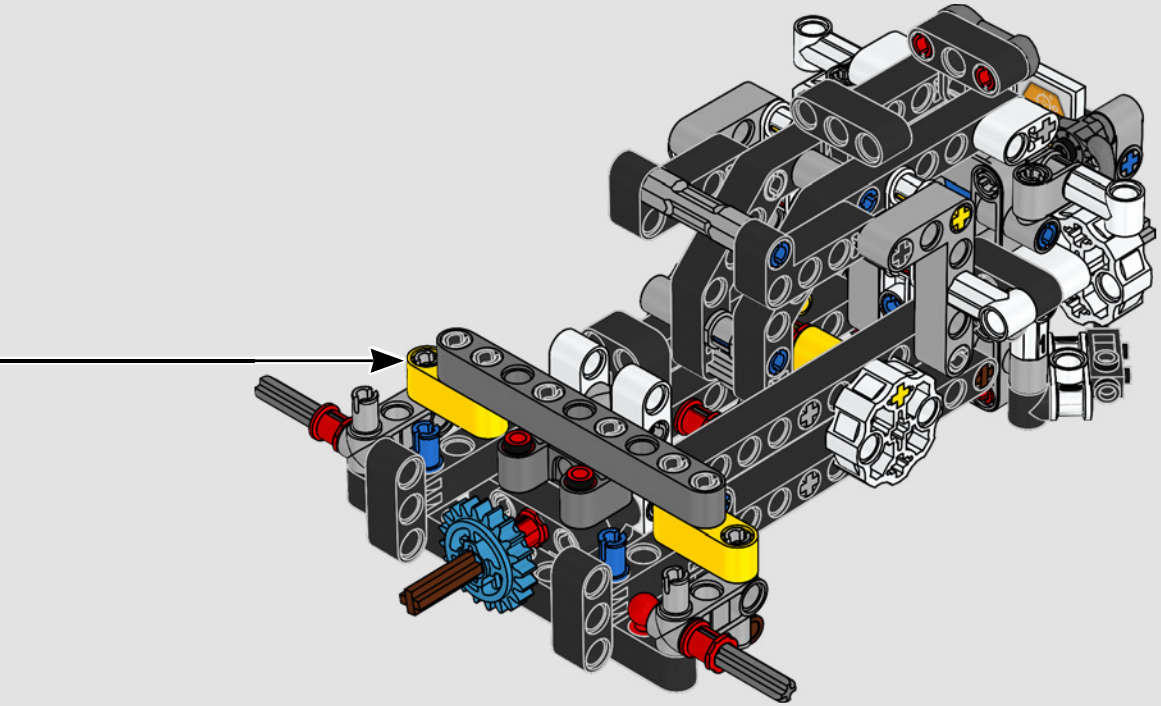

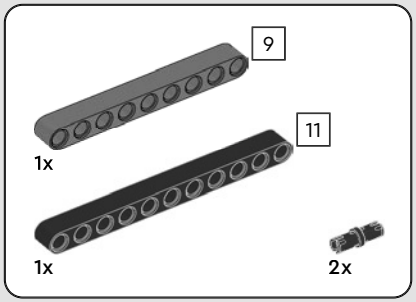

59

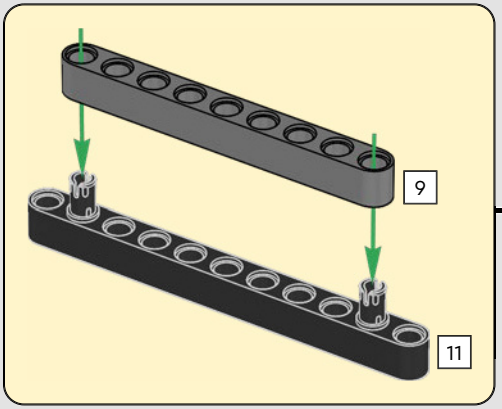

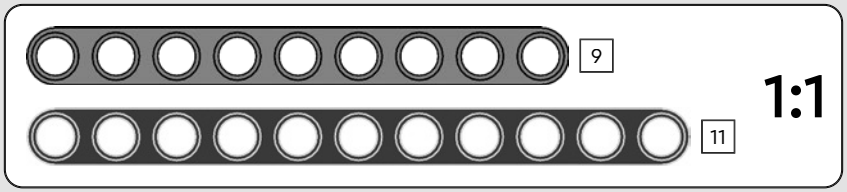

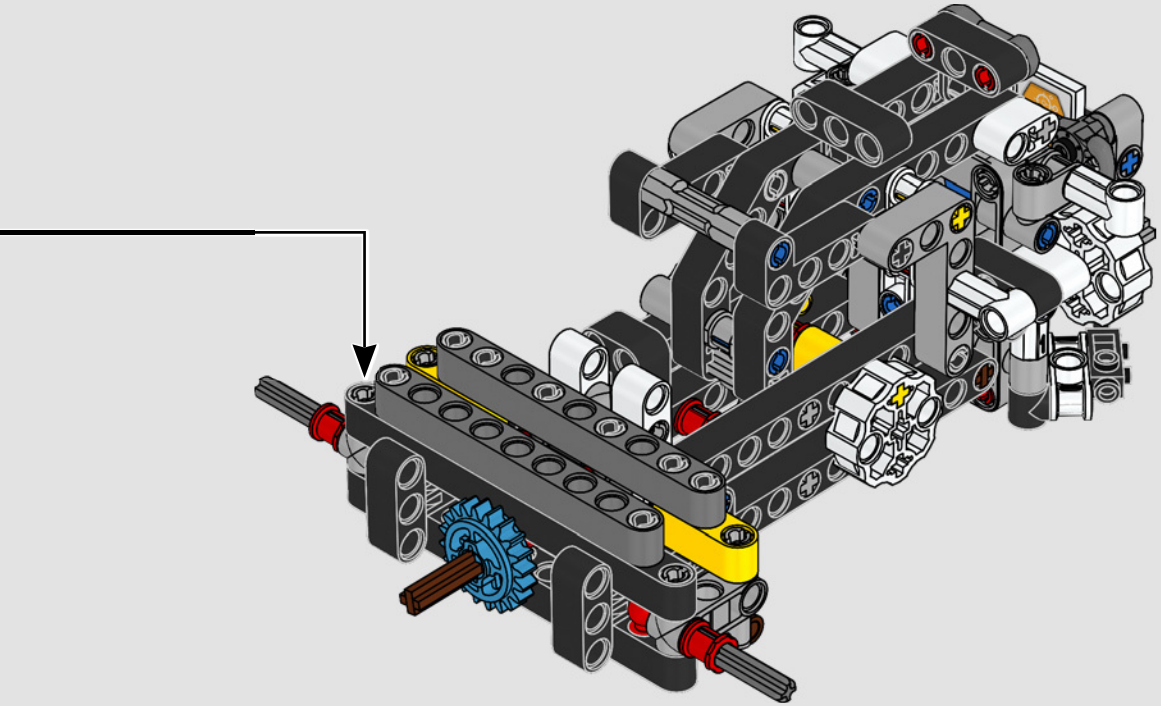

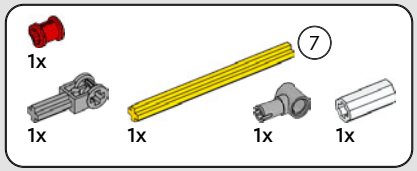

60

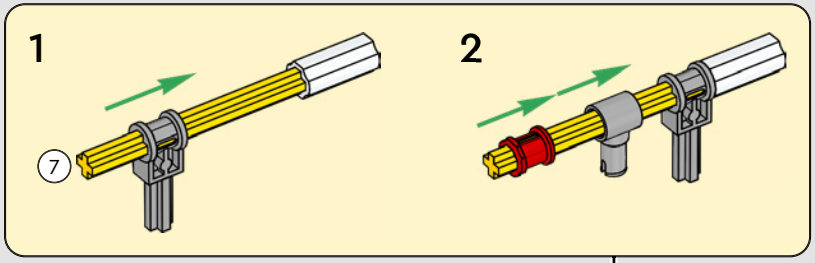

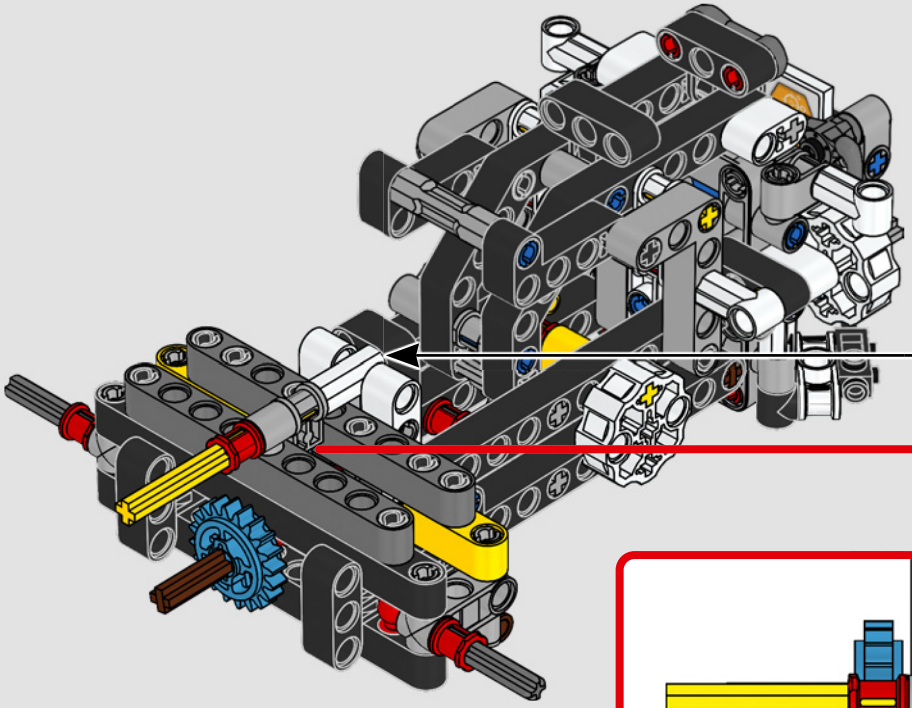

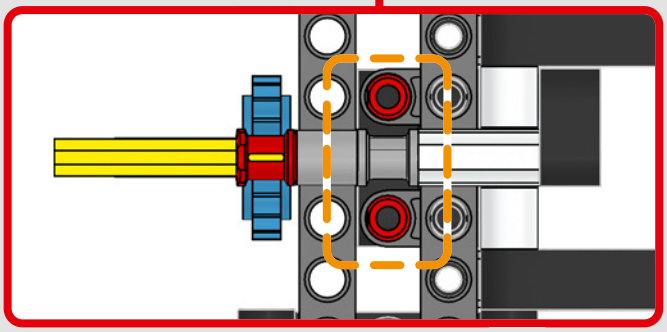

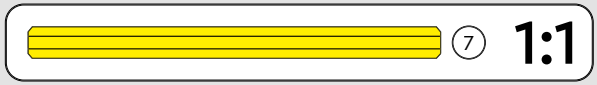

1x

61

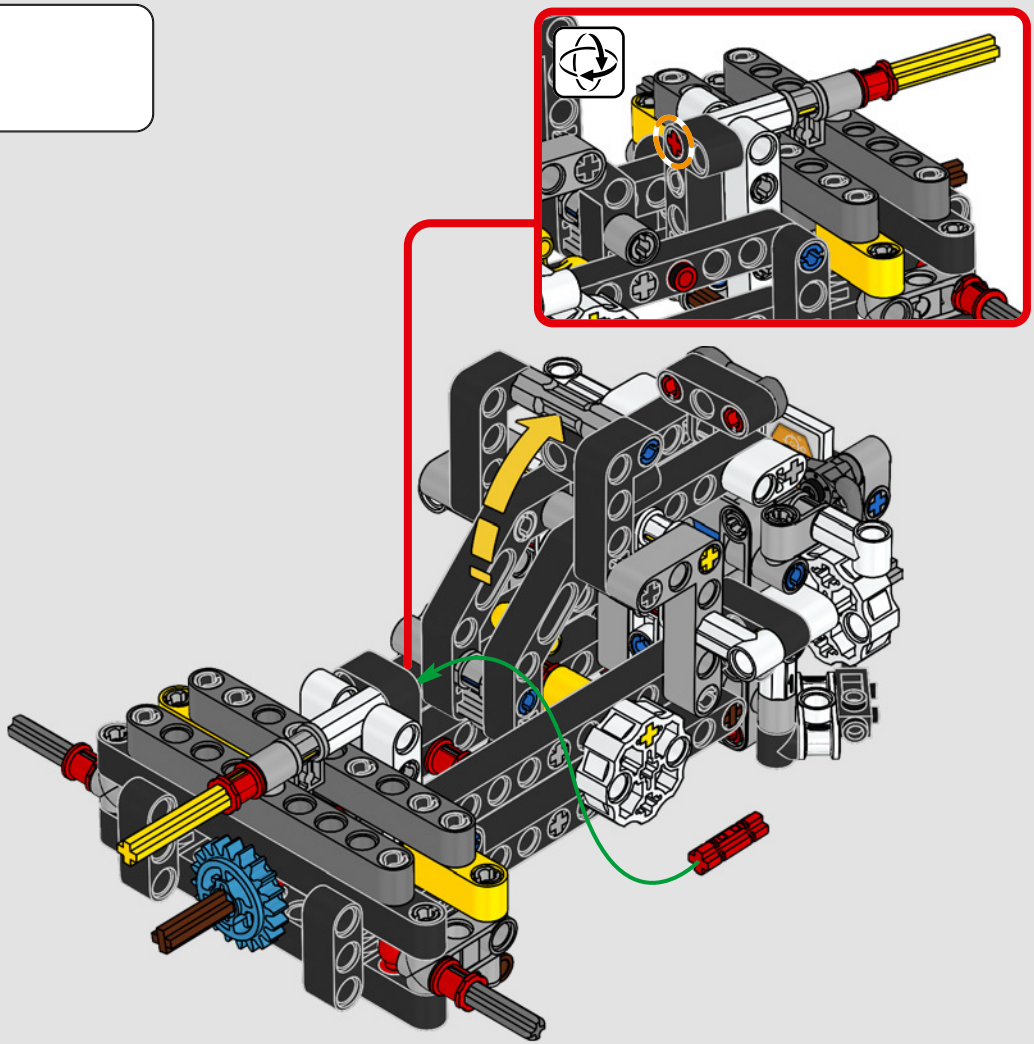

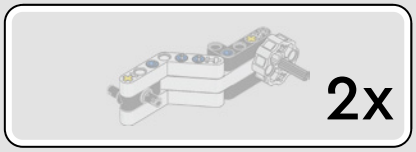

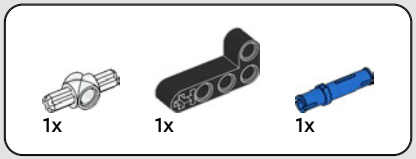

62

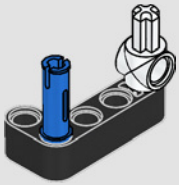

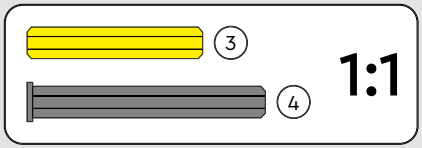

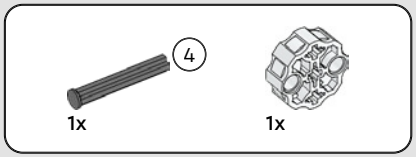

63

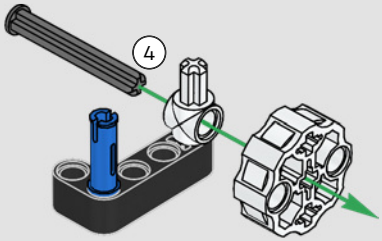

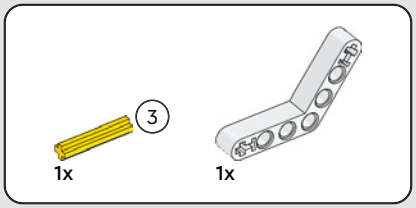

64

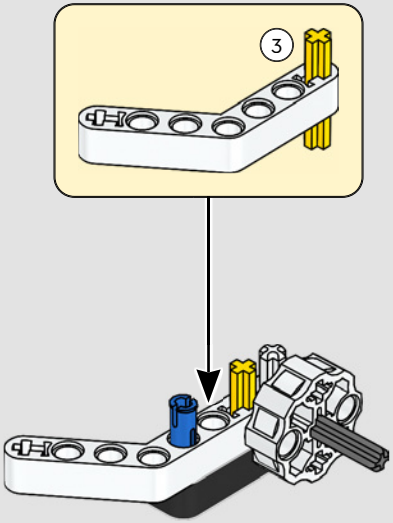

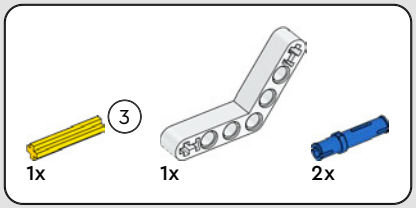

65

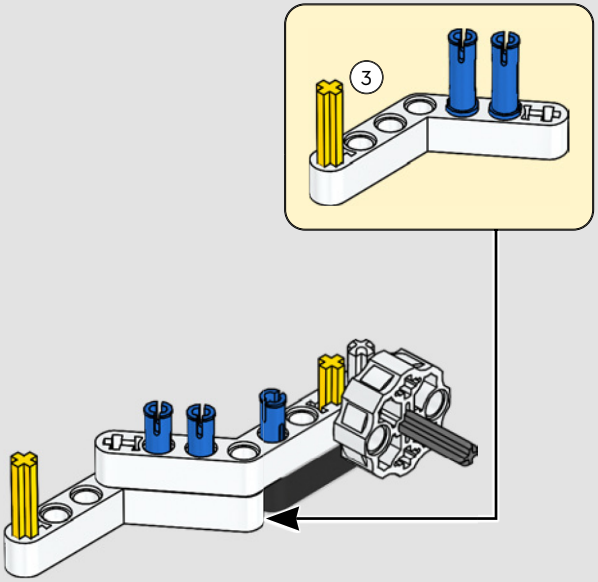

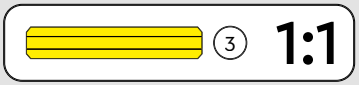

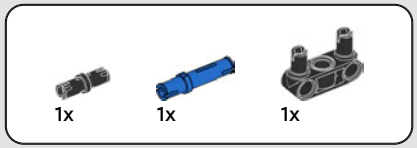

66

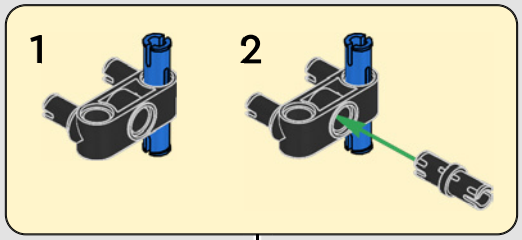

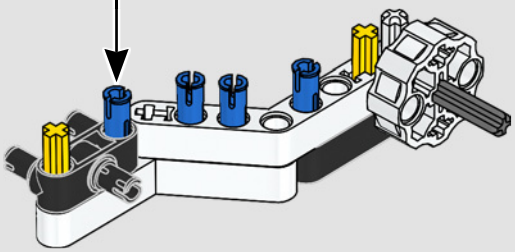

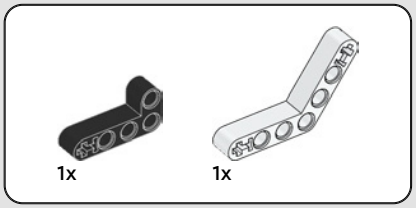

67

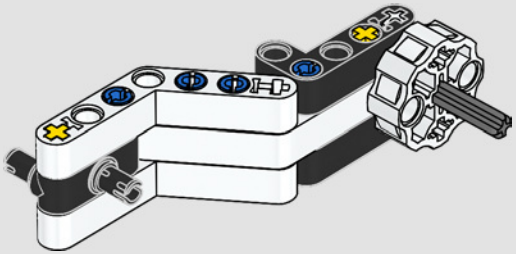

2x

68

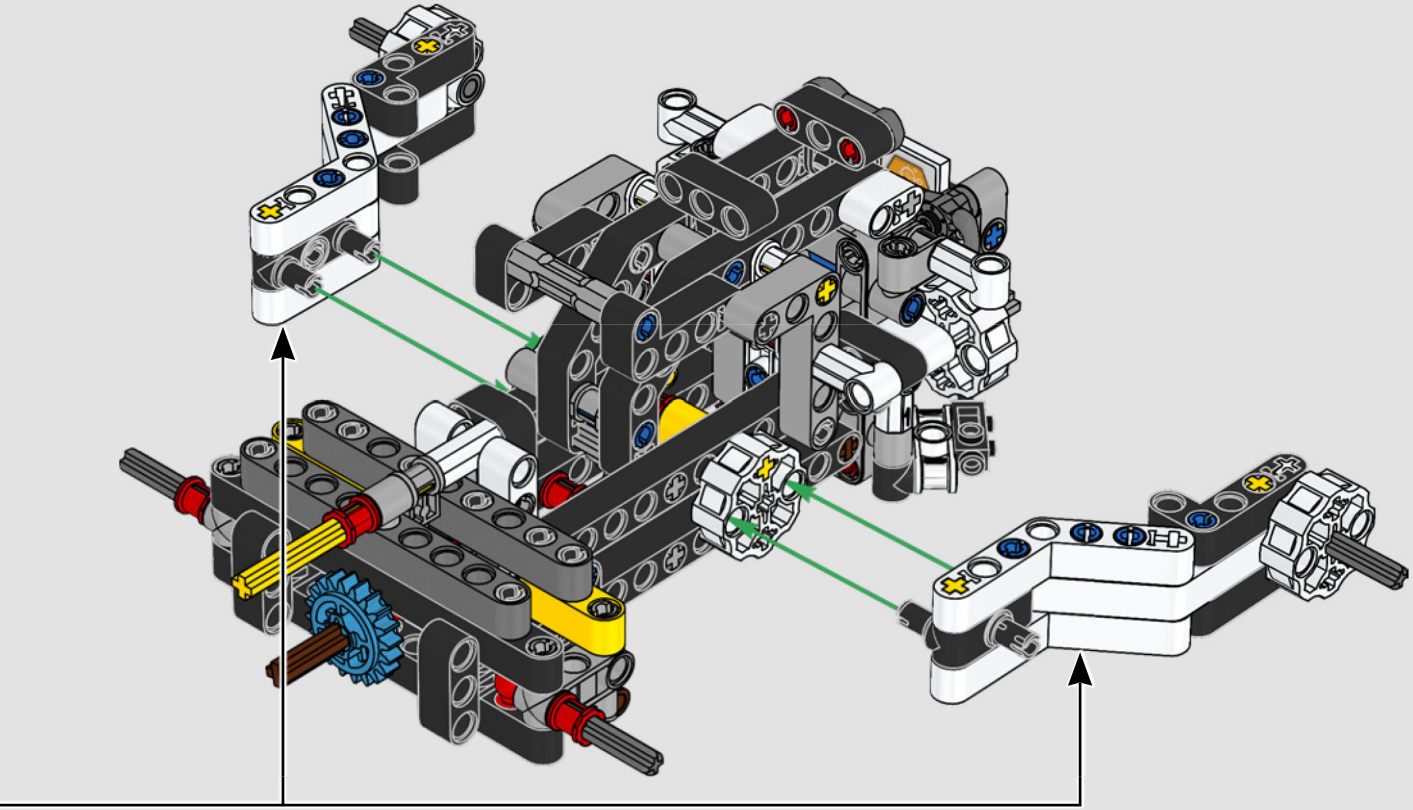

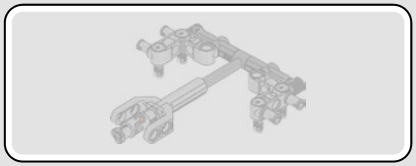

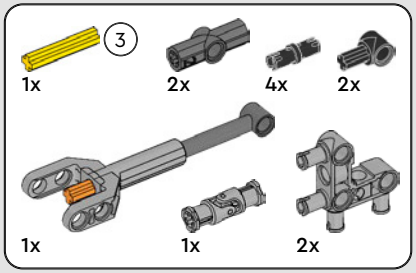

69

1

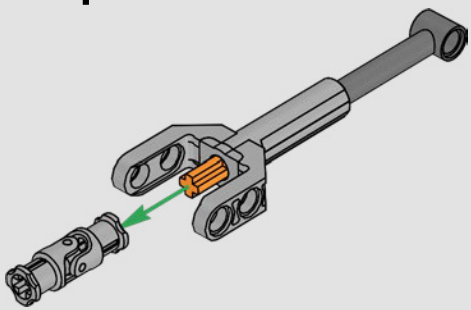

2

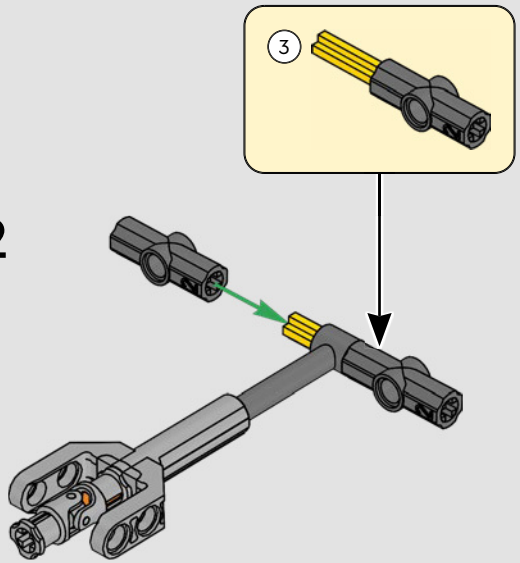

1:1

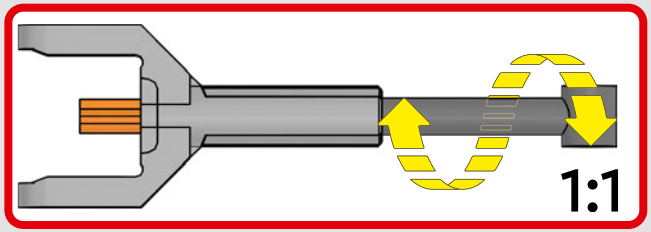

3

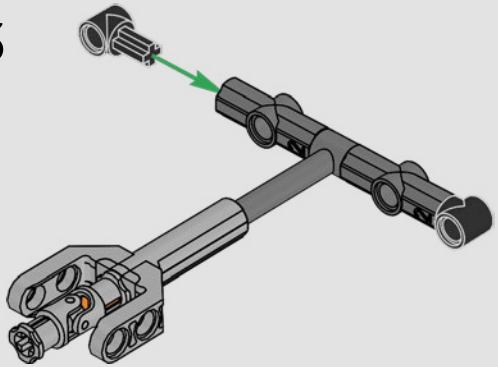

4

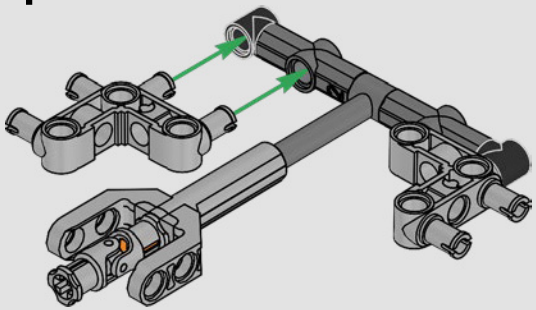

5

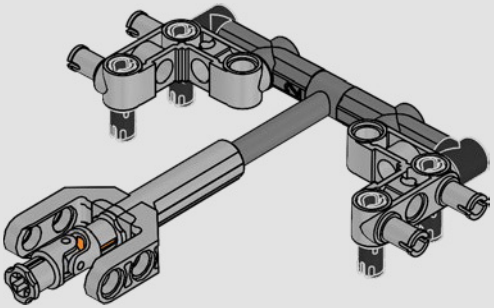

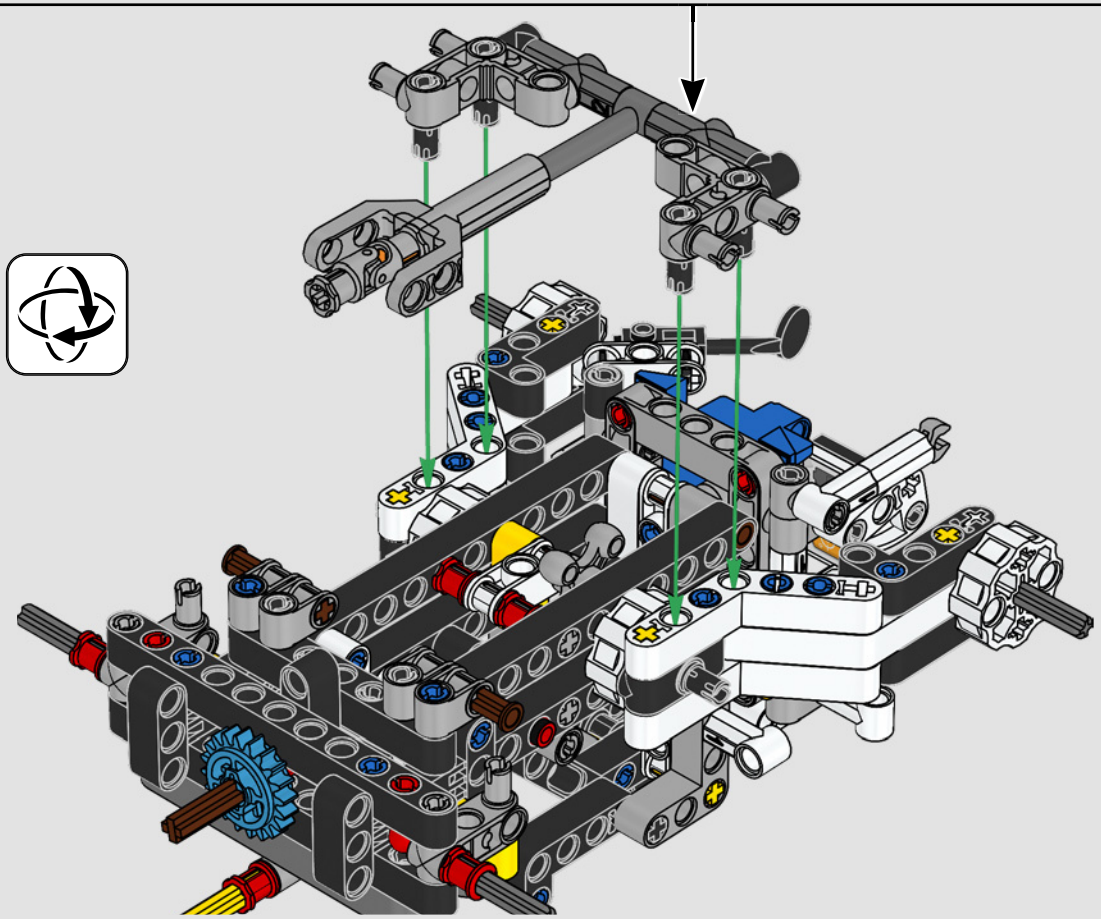

70

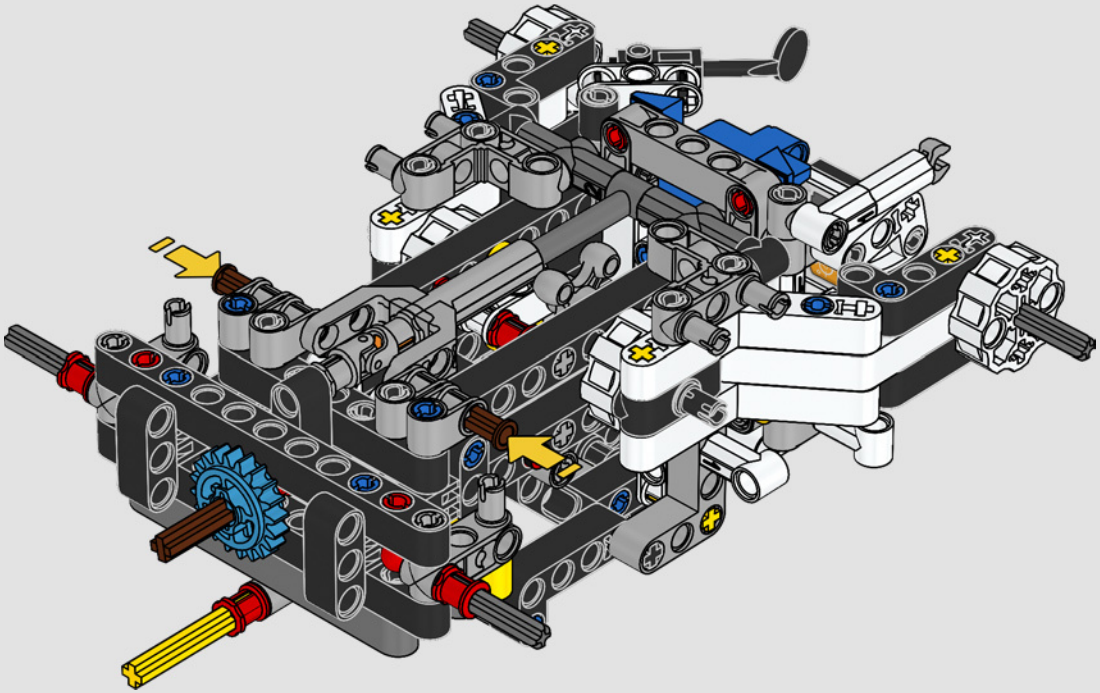

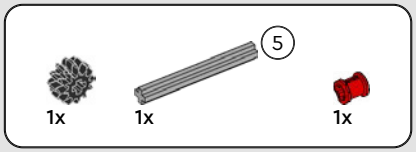

71

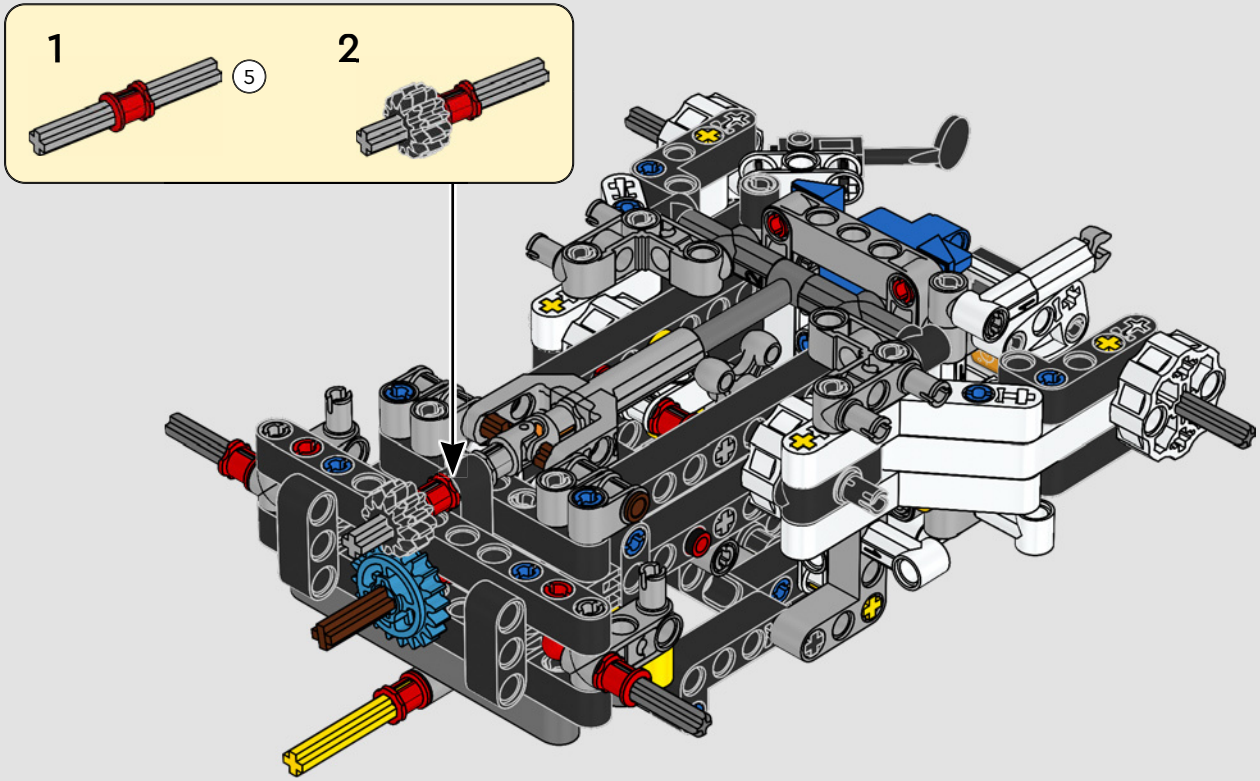

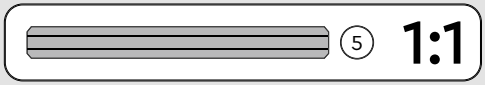

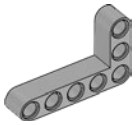

2x

72

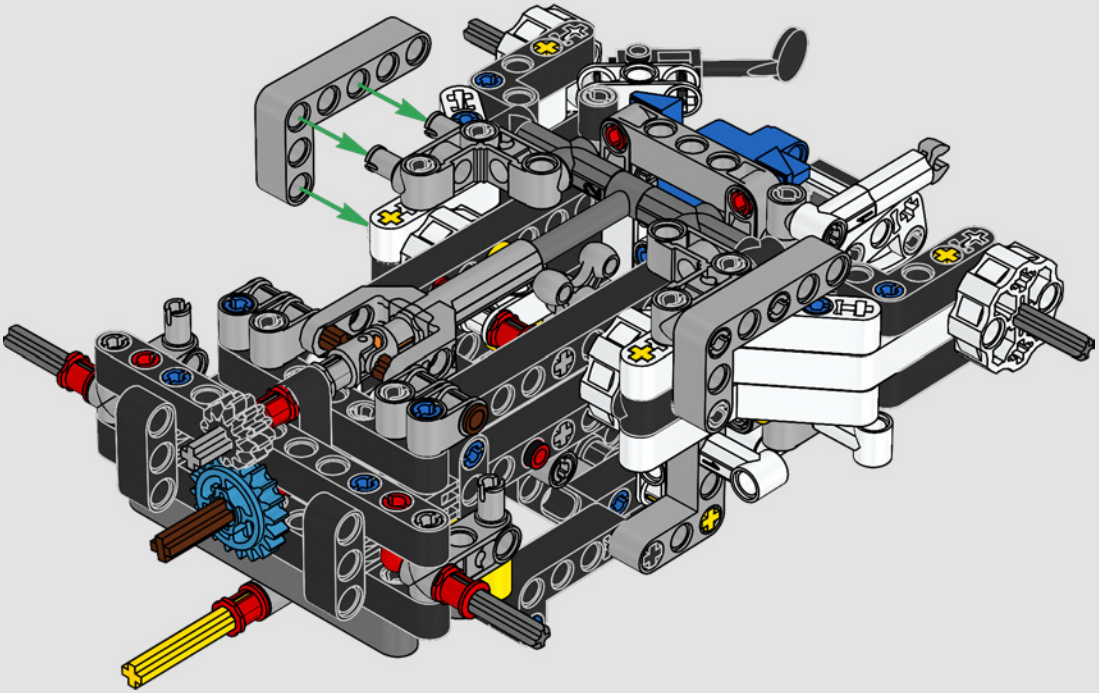

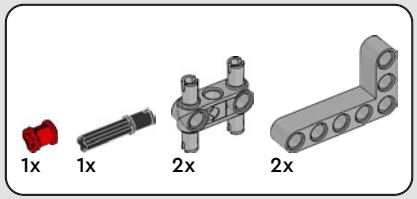

73

1

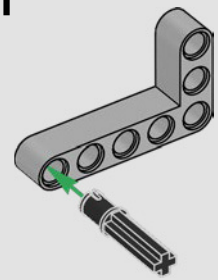

2

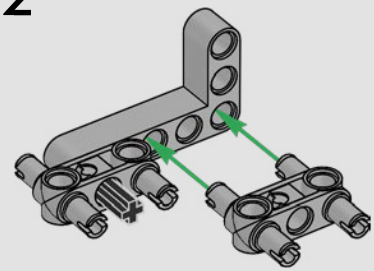

3

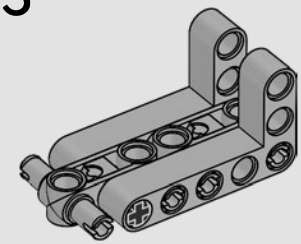

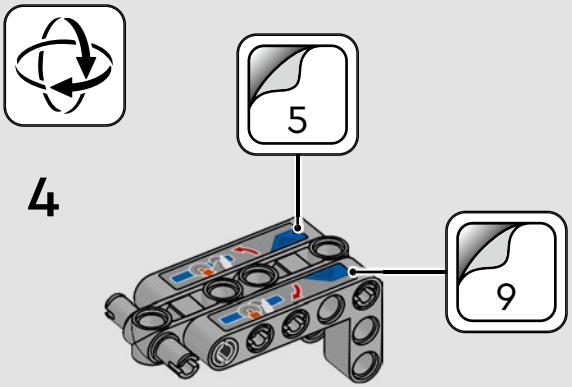
4
5
9

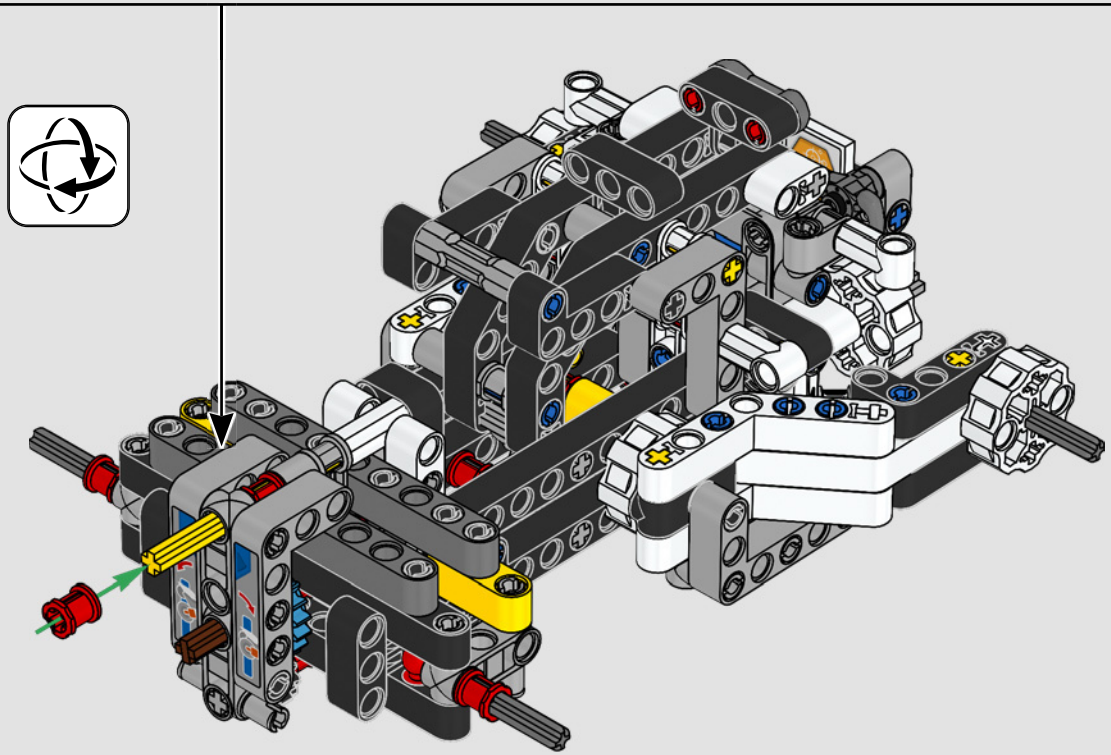

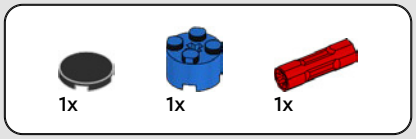

74

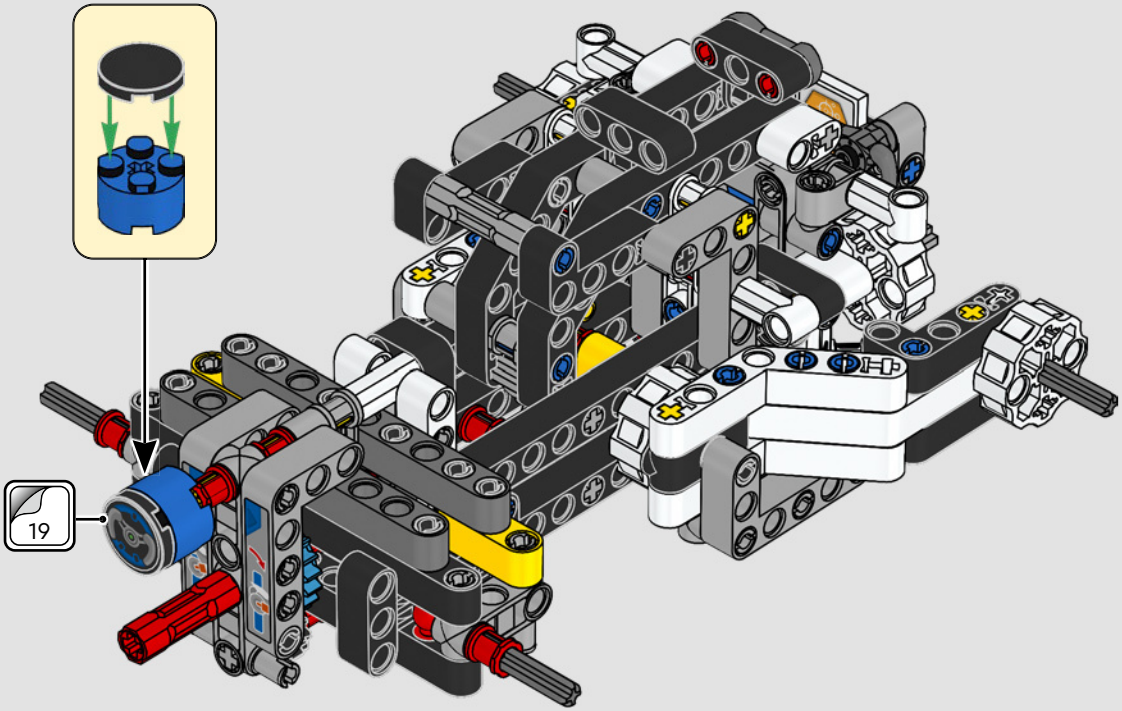

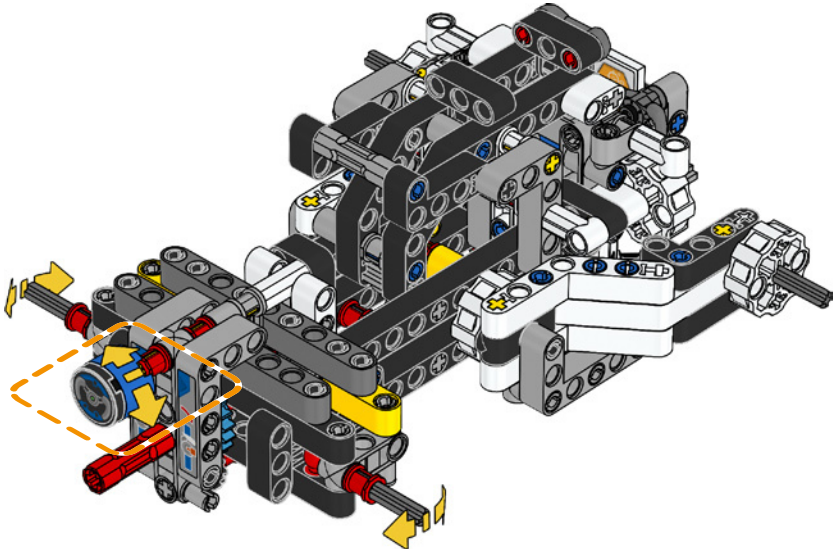

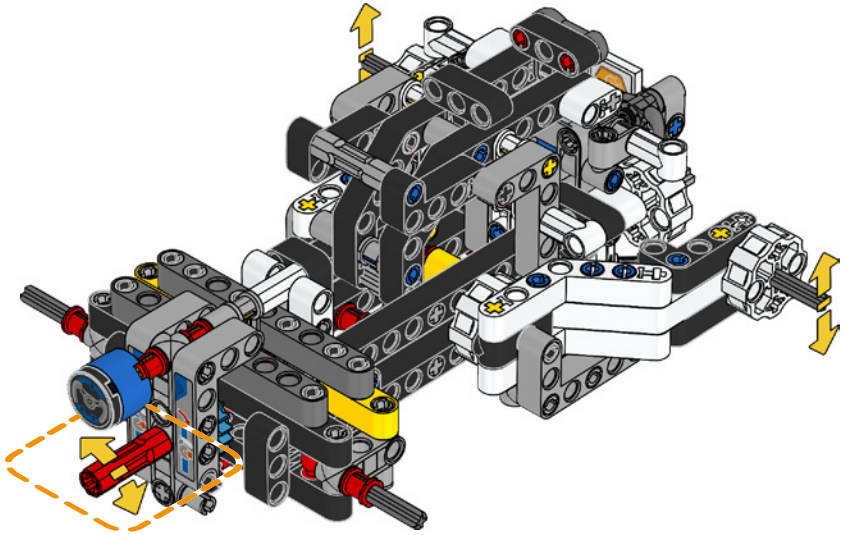

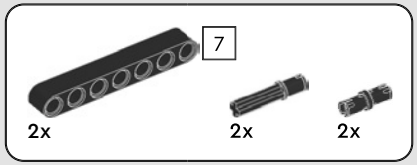

75

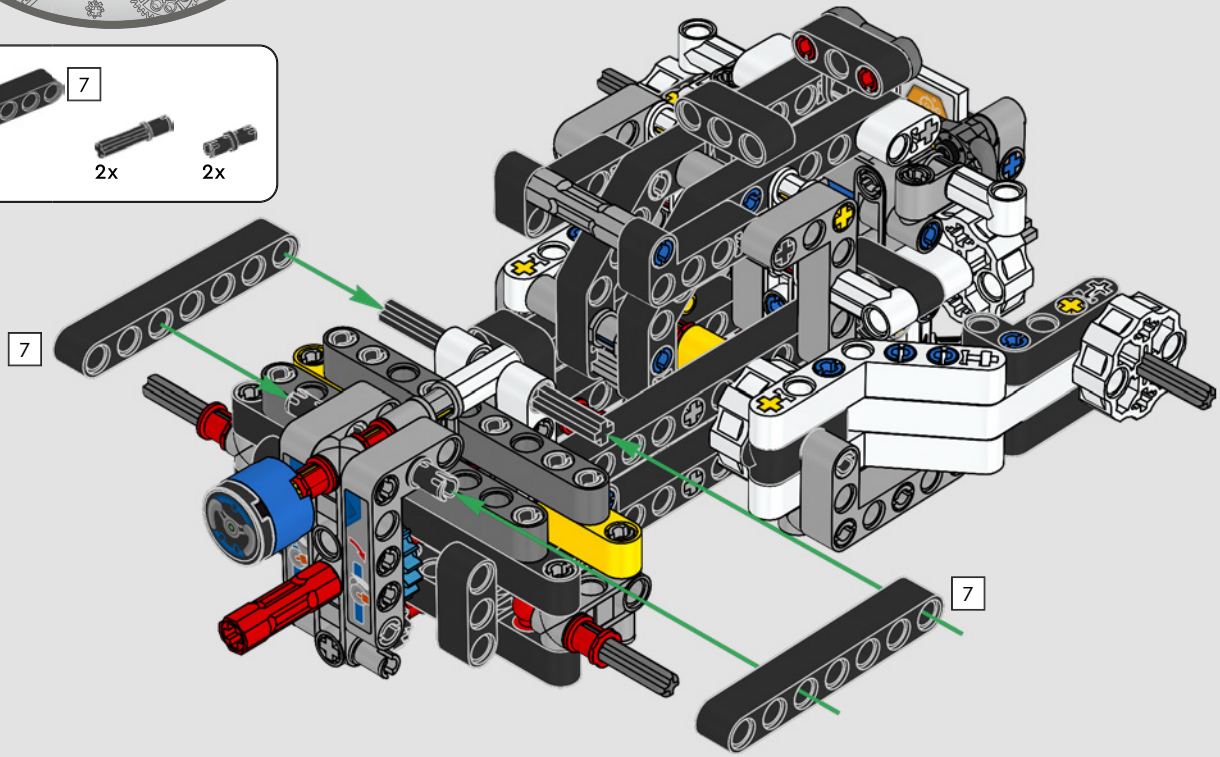

2x

76

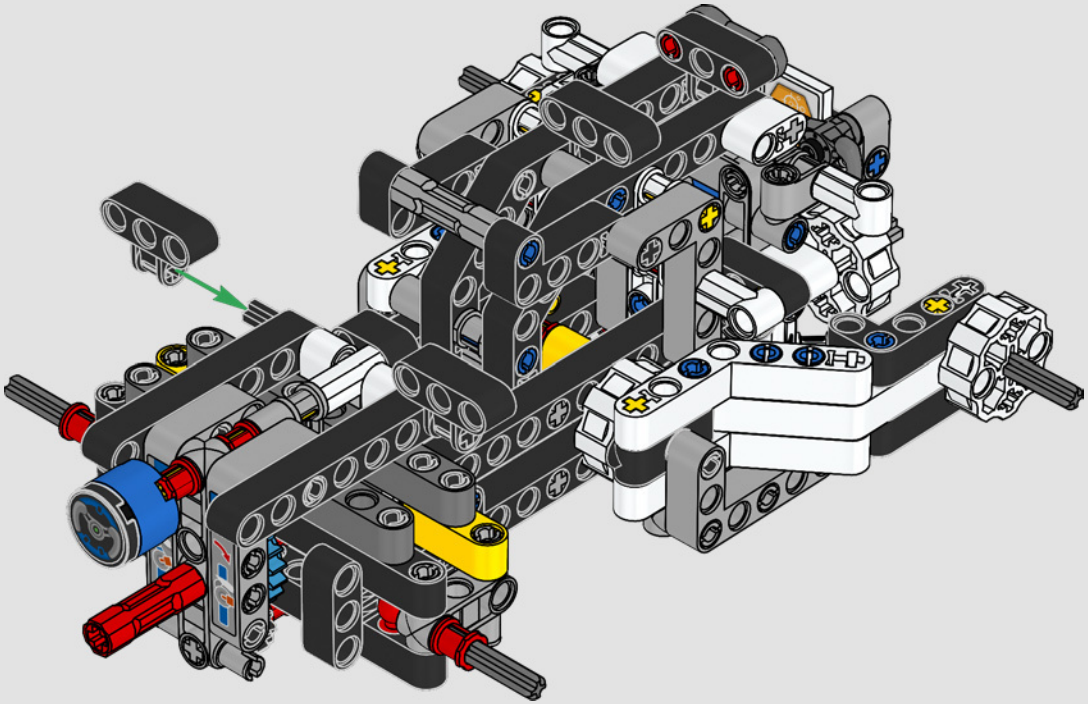

7

1:1

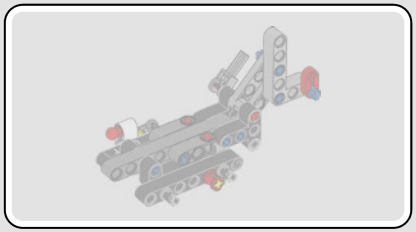

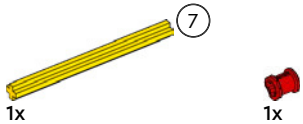

77

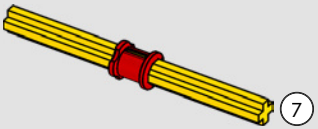

78

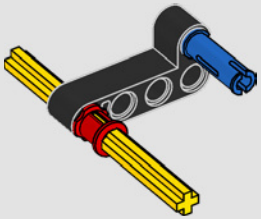

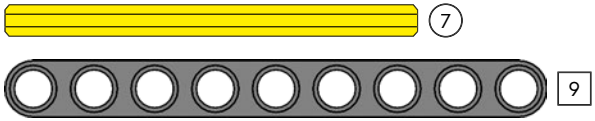

1:1

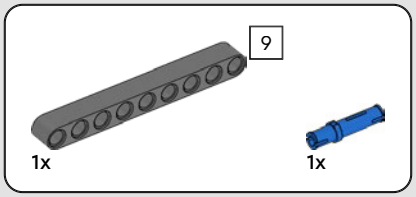

79

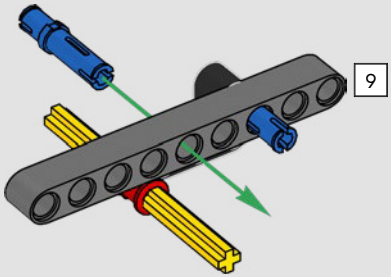

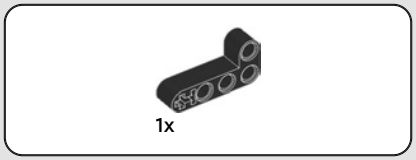

80

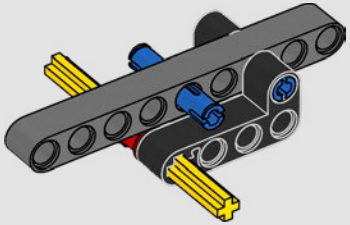

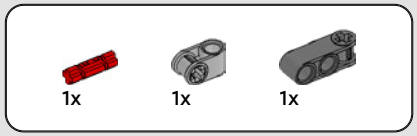

81

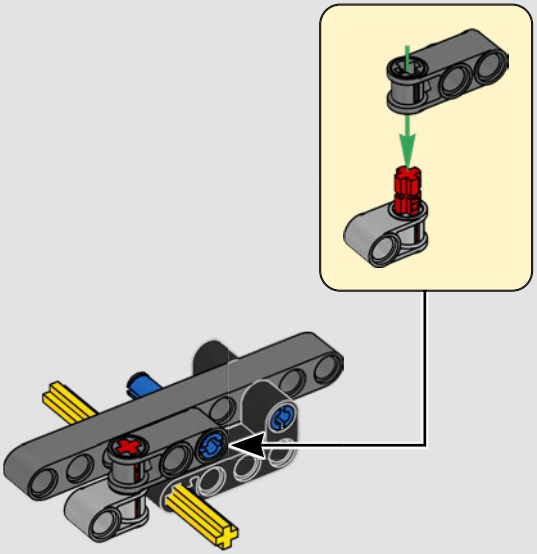

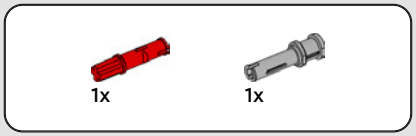

82

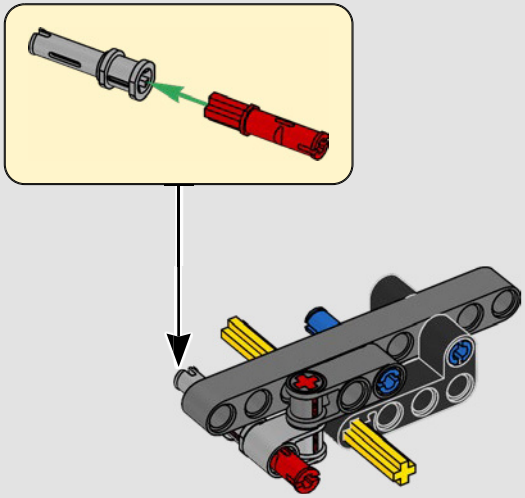

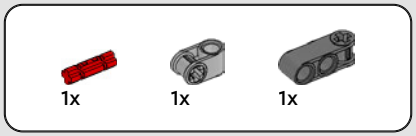

83

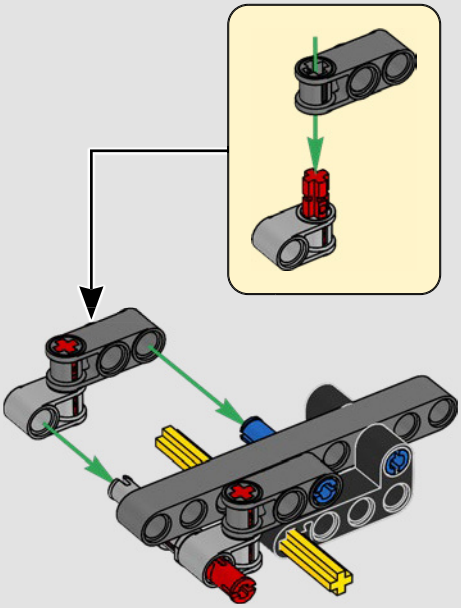

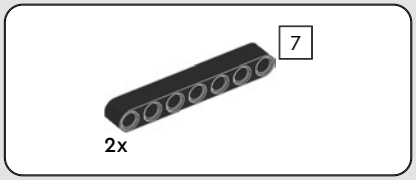

84

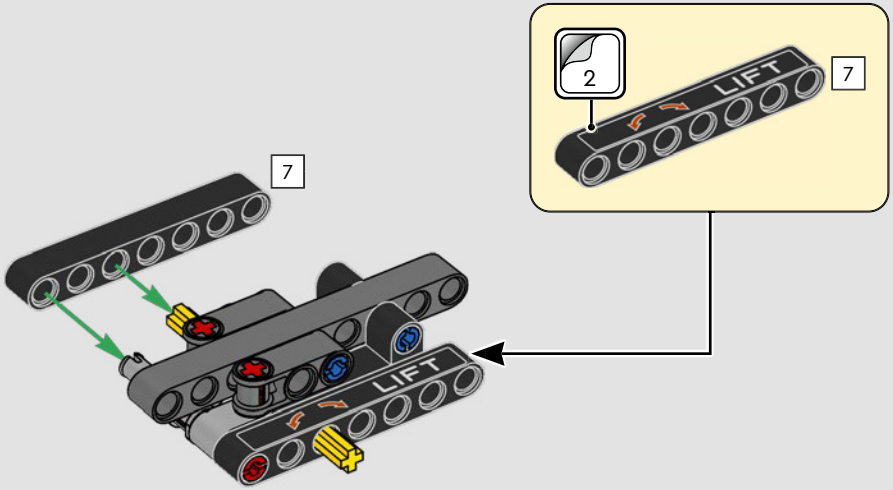

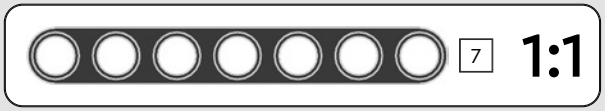

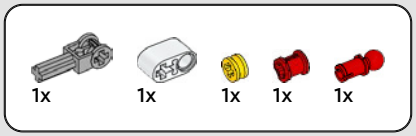

85

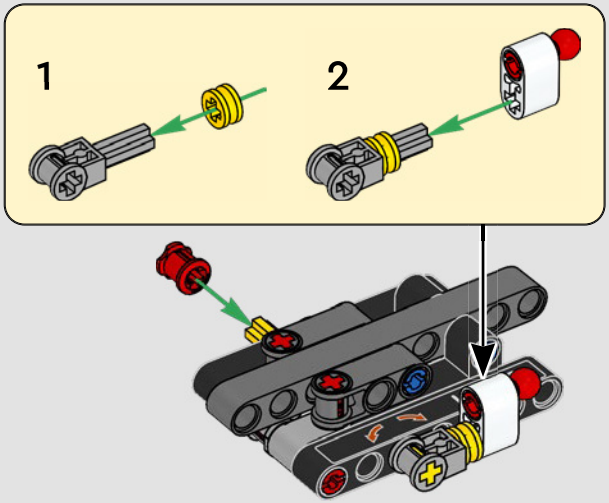

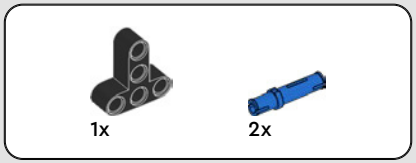

86

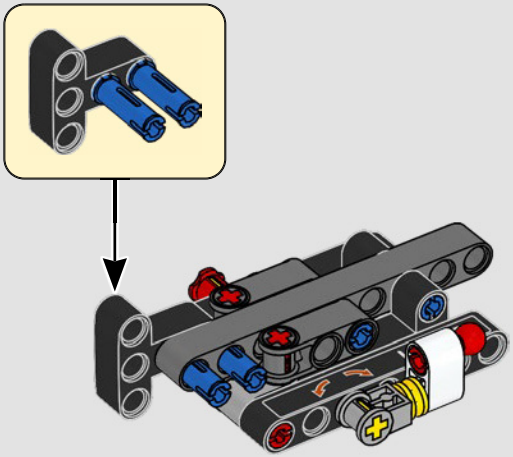

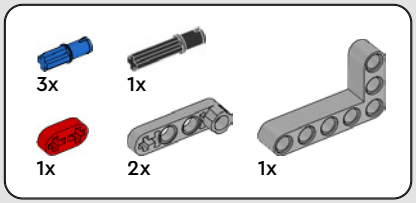

87

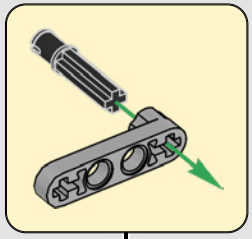

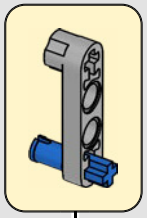

1

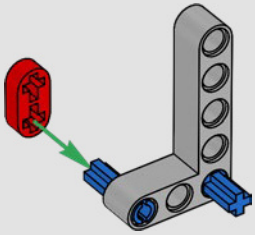

2

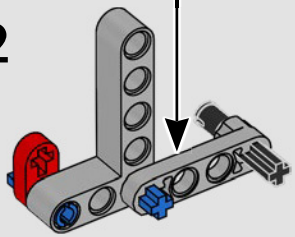

3

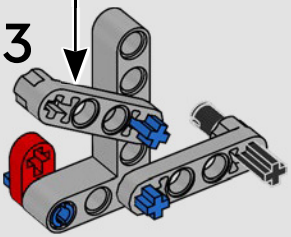

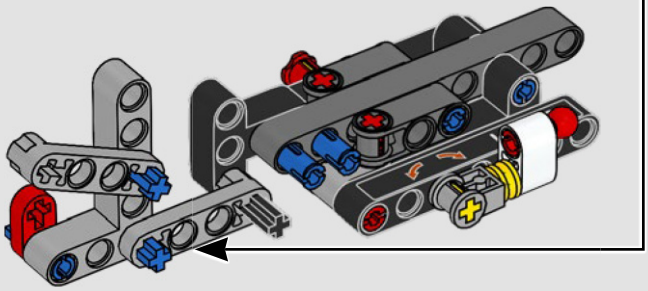

88

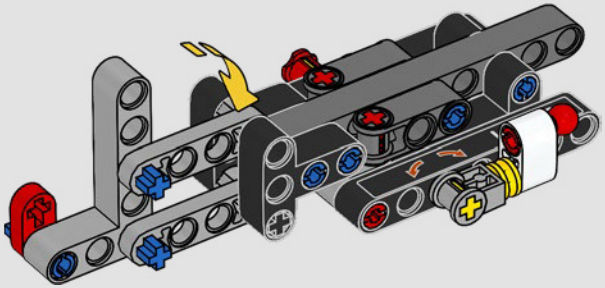

89

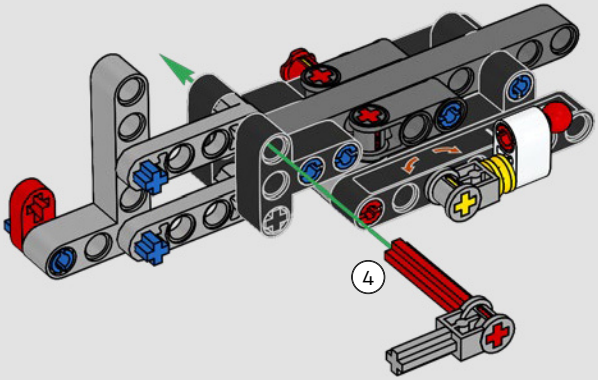

2x

90

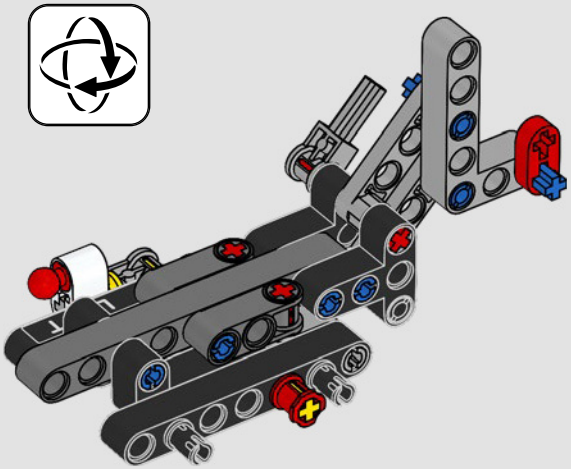

91

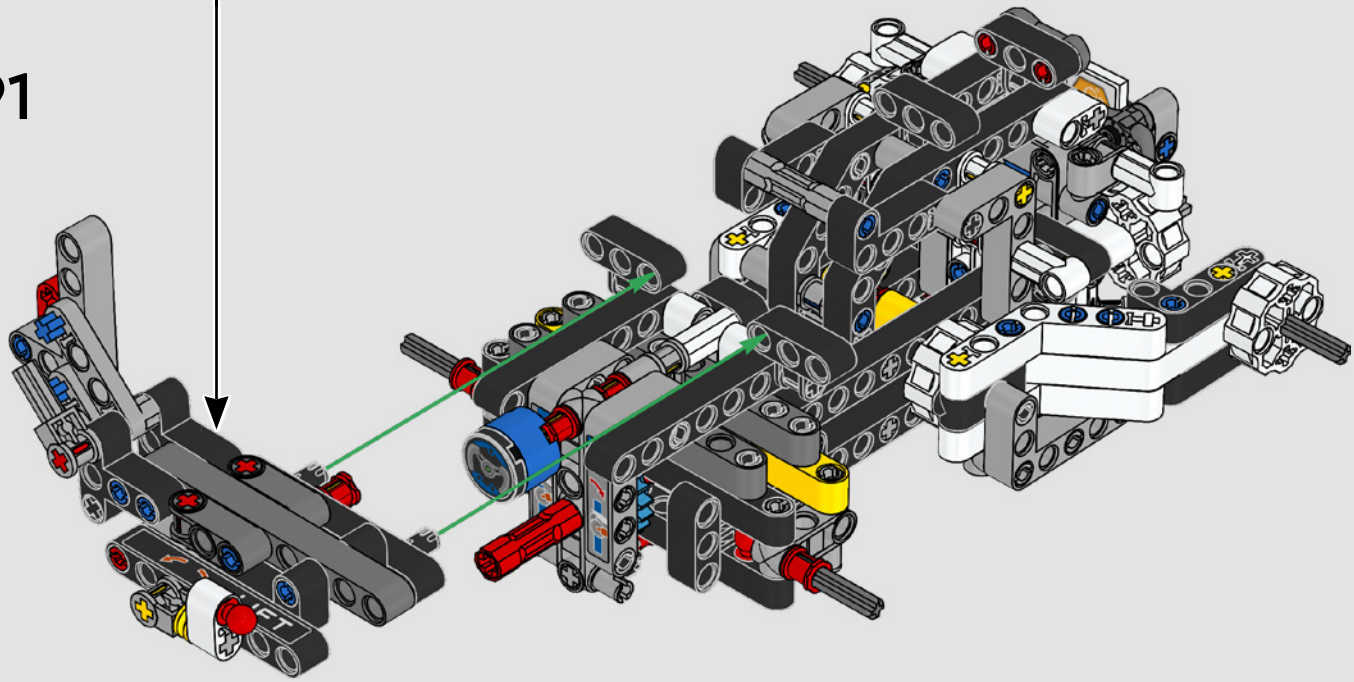

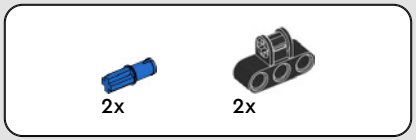

92

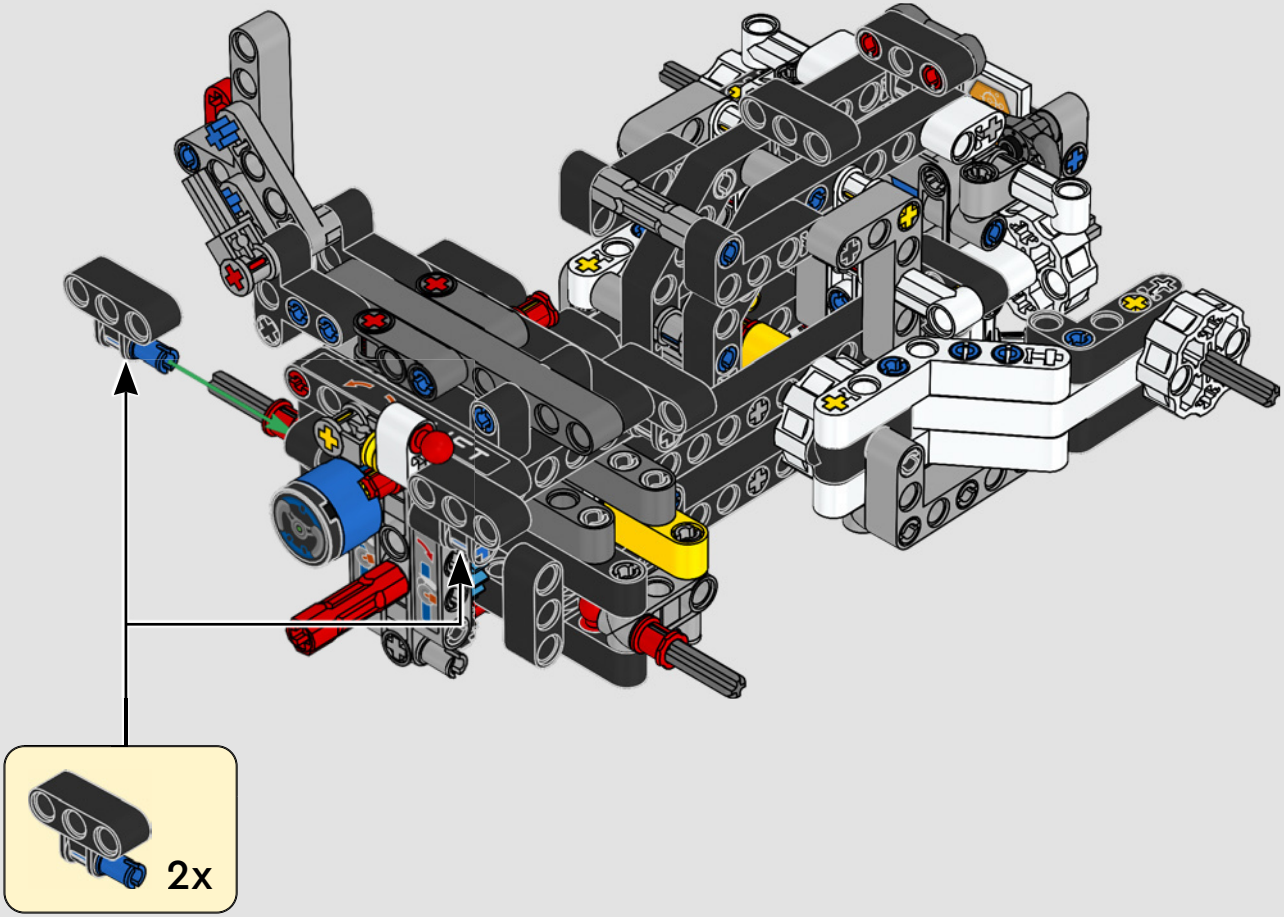

93

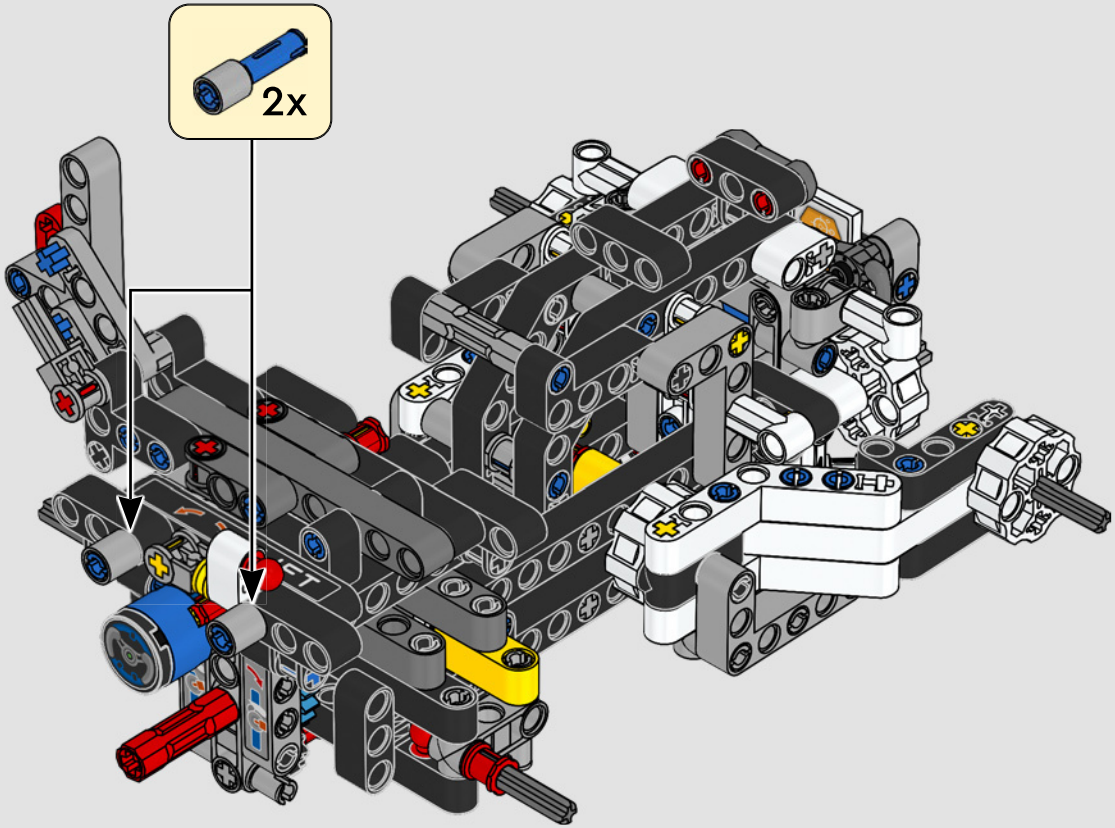

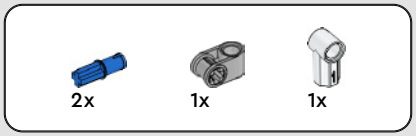

94

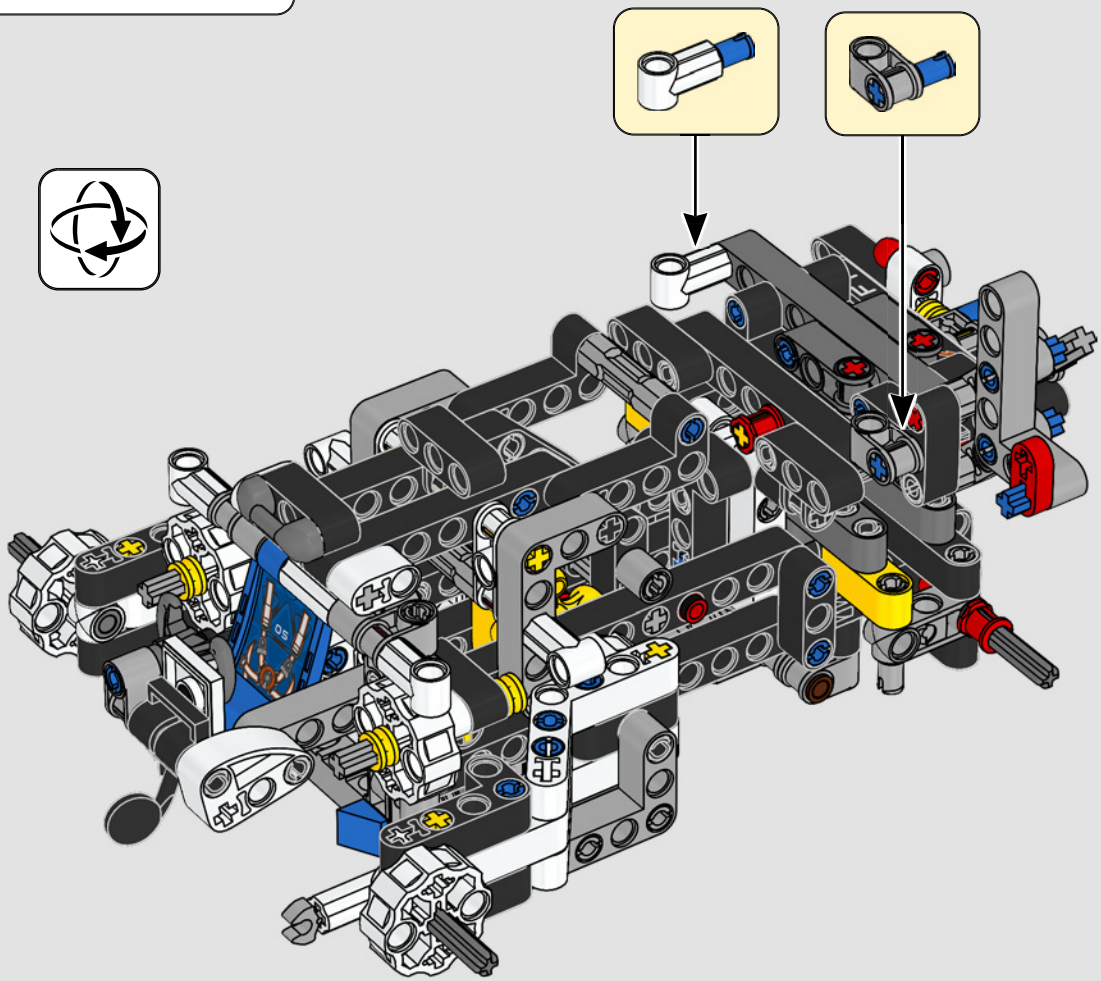

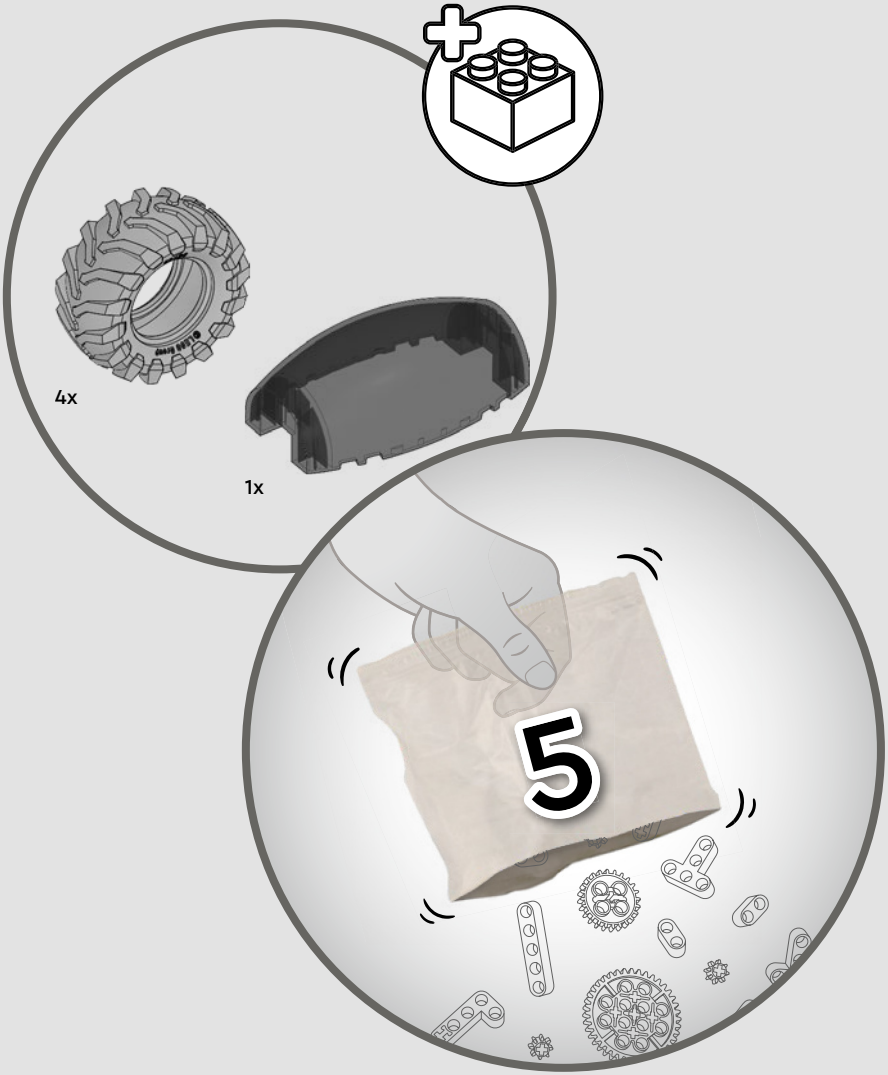
4x
1x
5

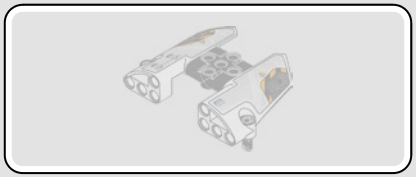

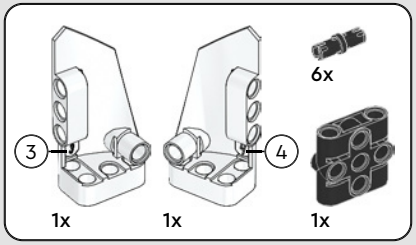

95

1

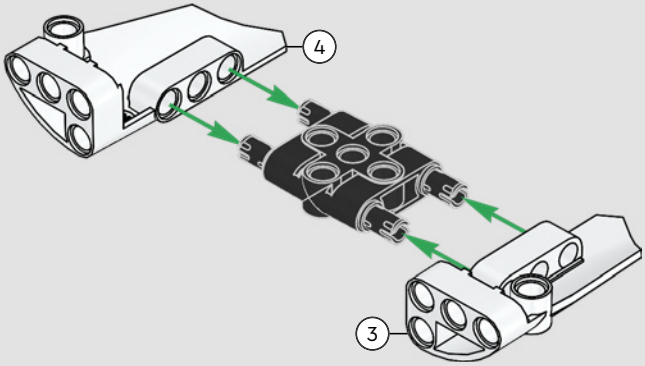

2

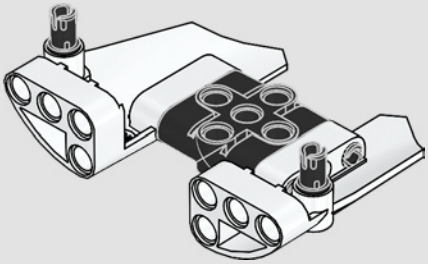

3

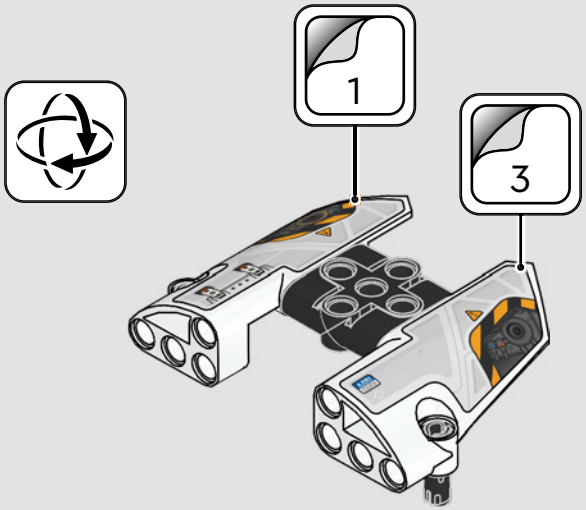

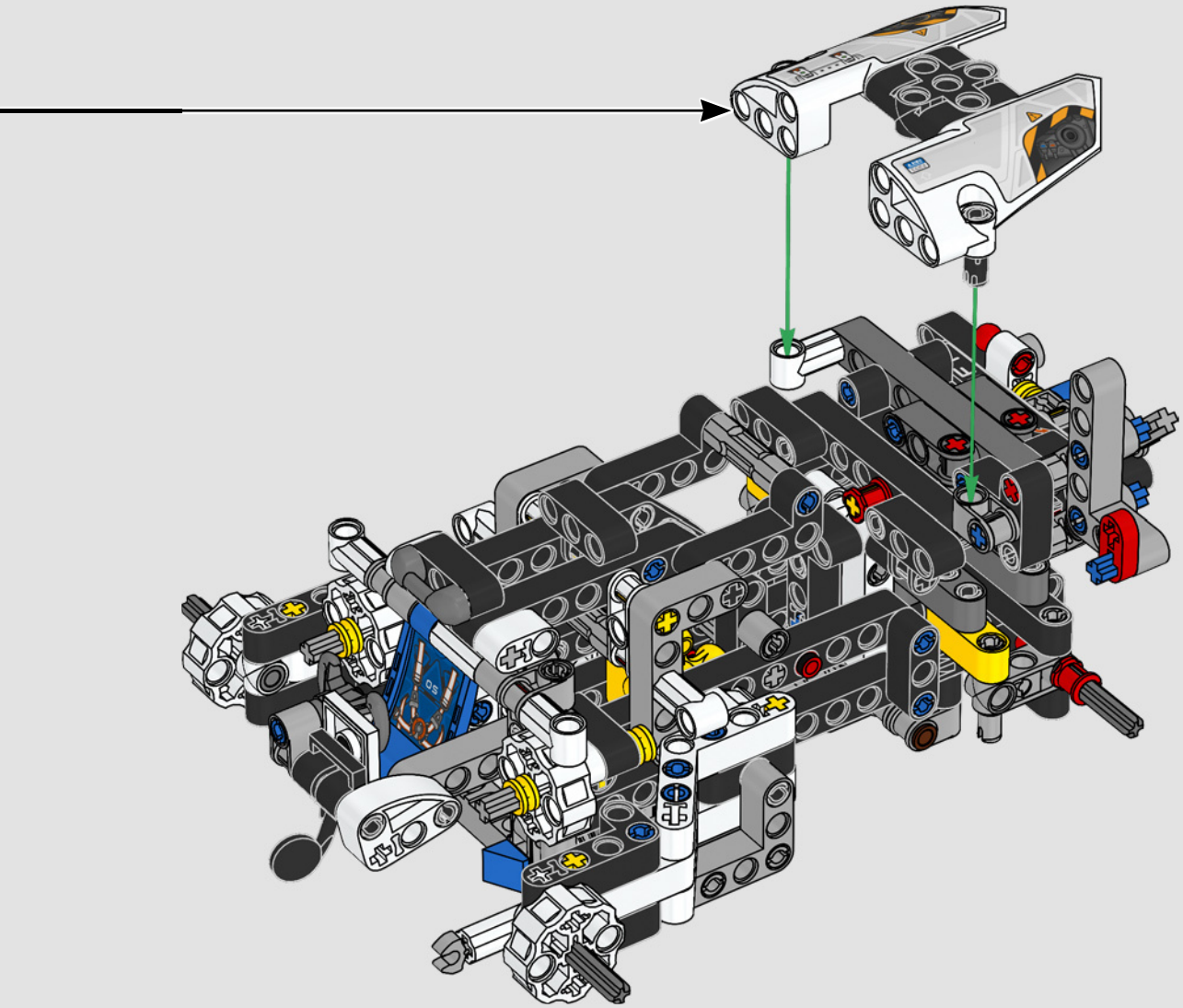

6x

96

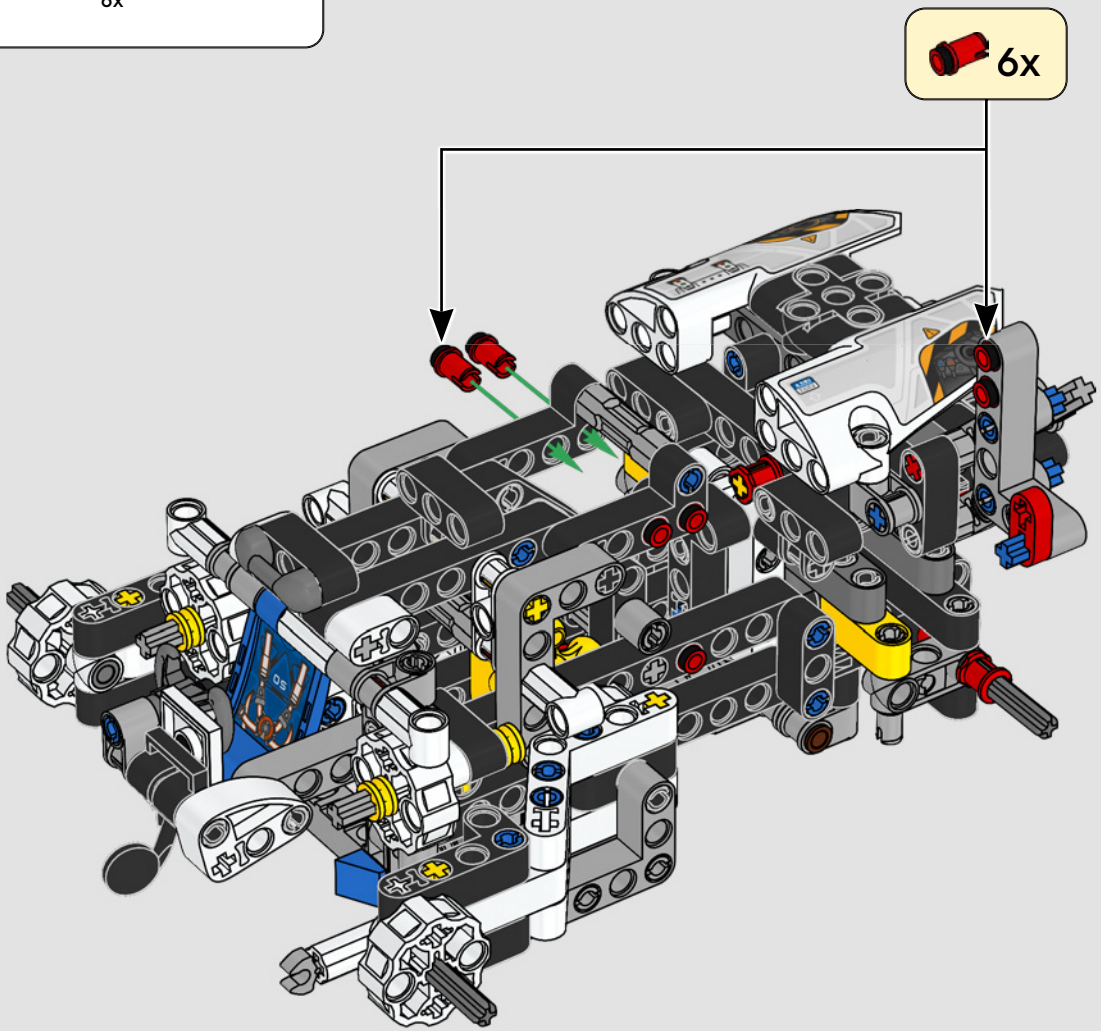

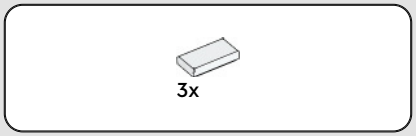

97

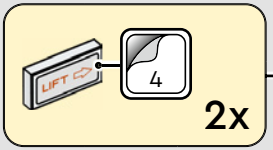

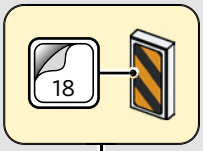

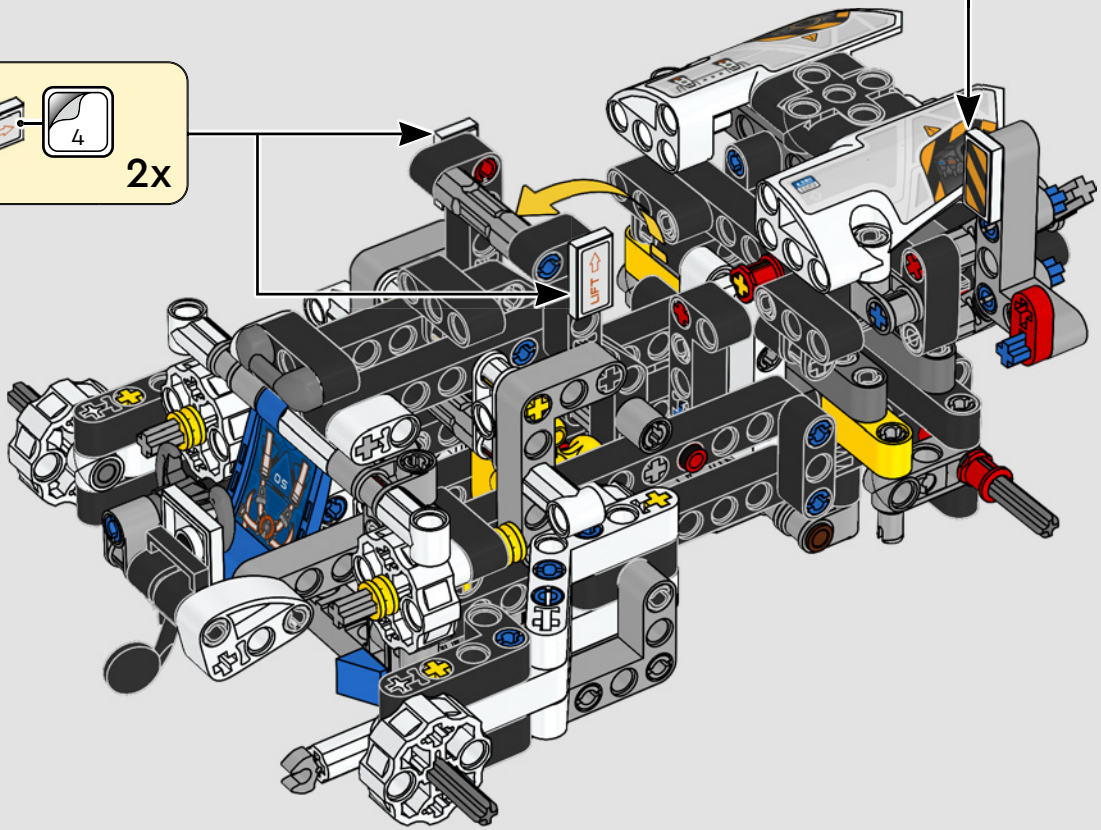

98

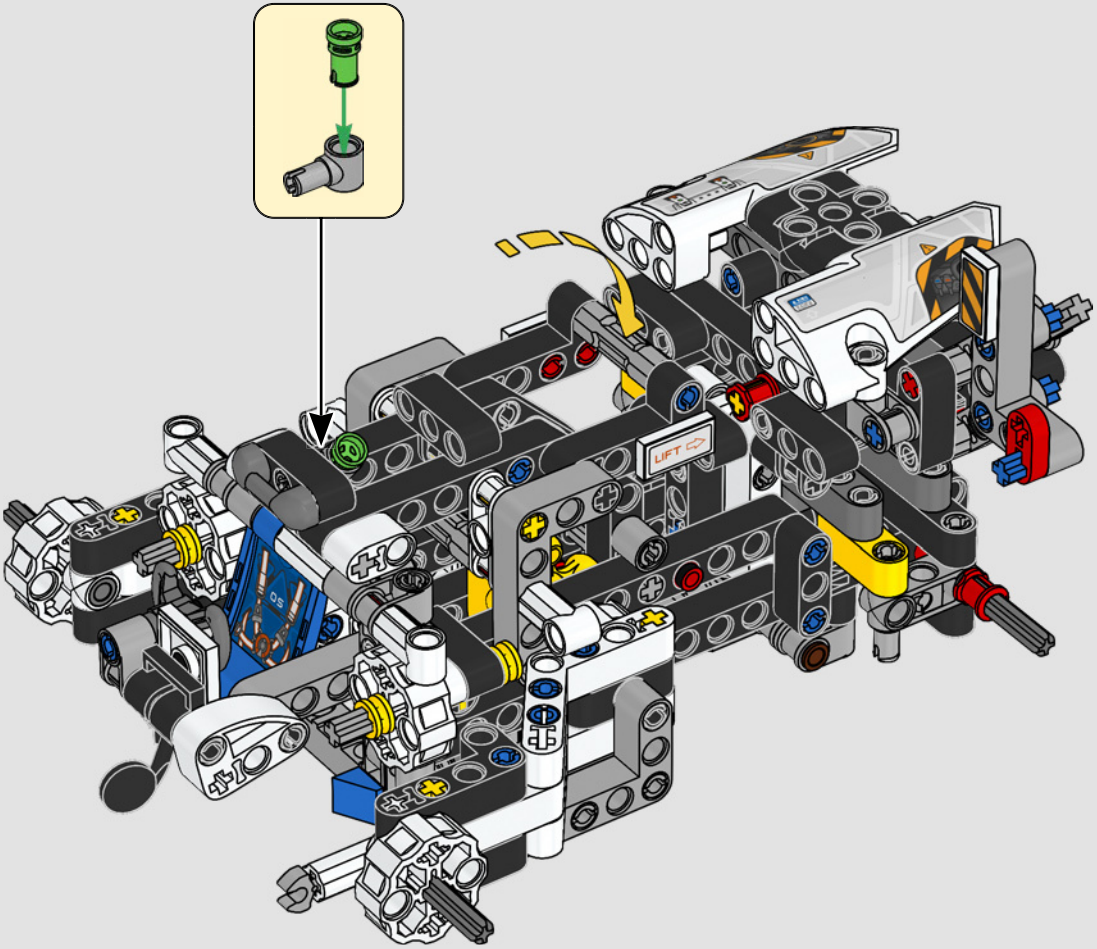

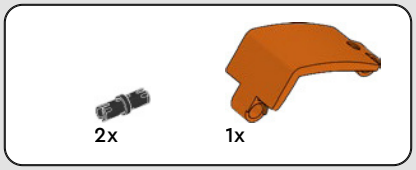

99

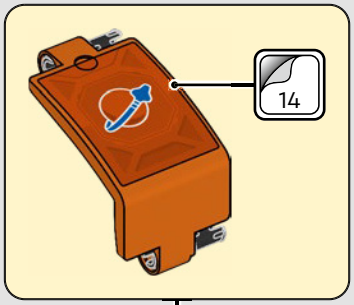

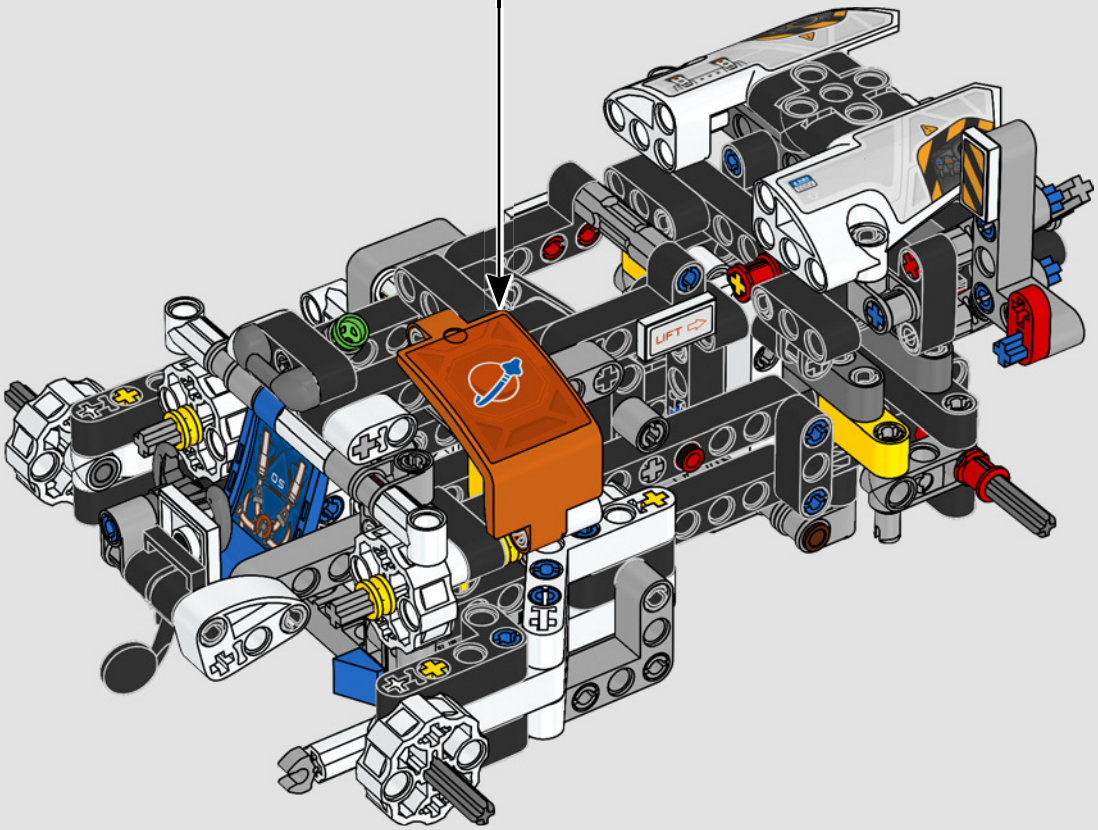

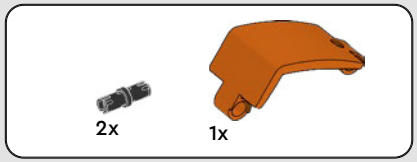

100

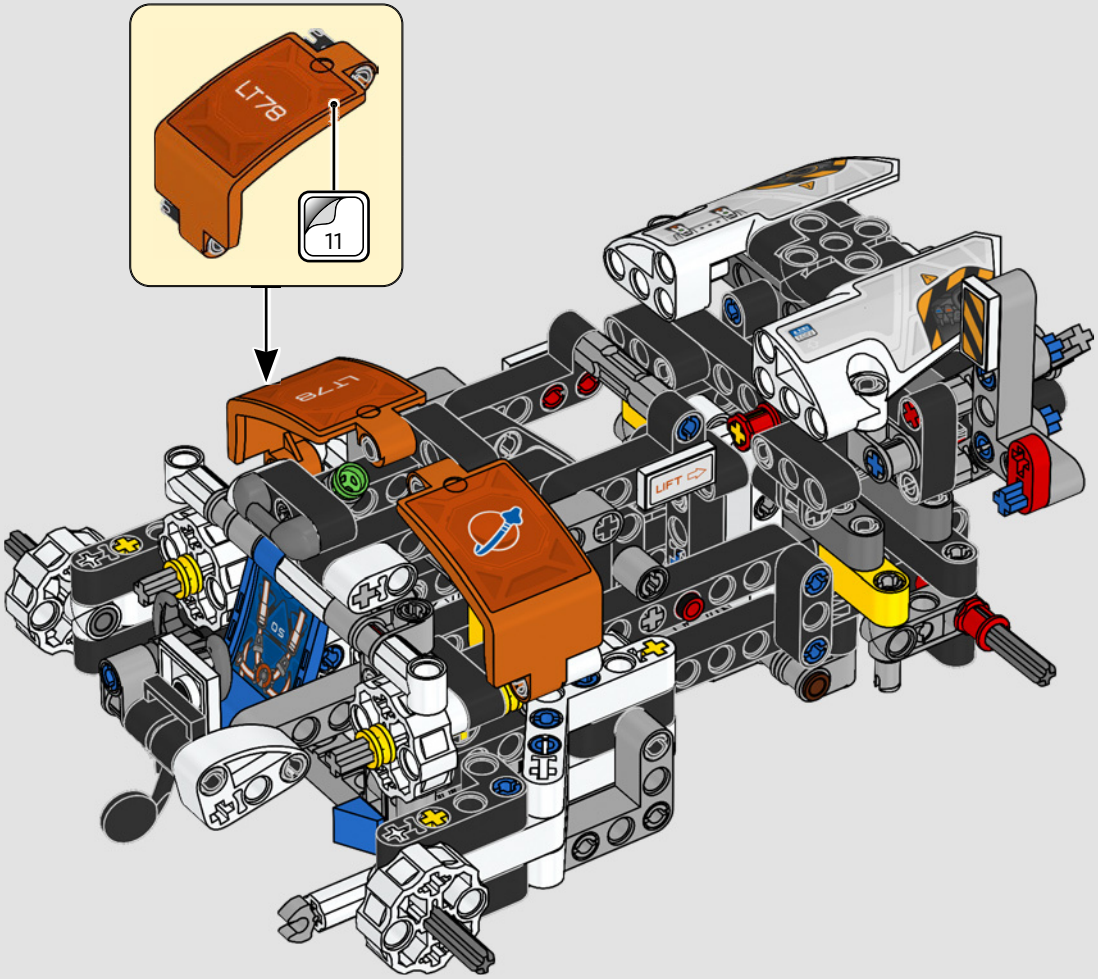

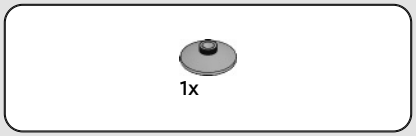

101

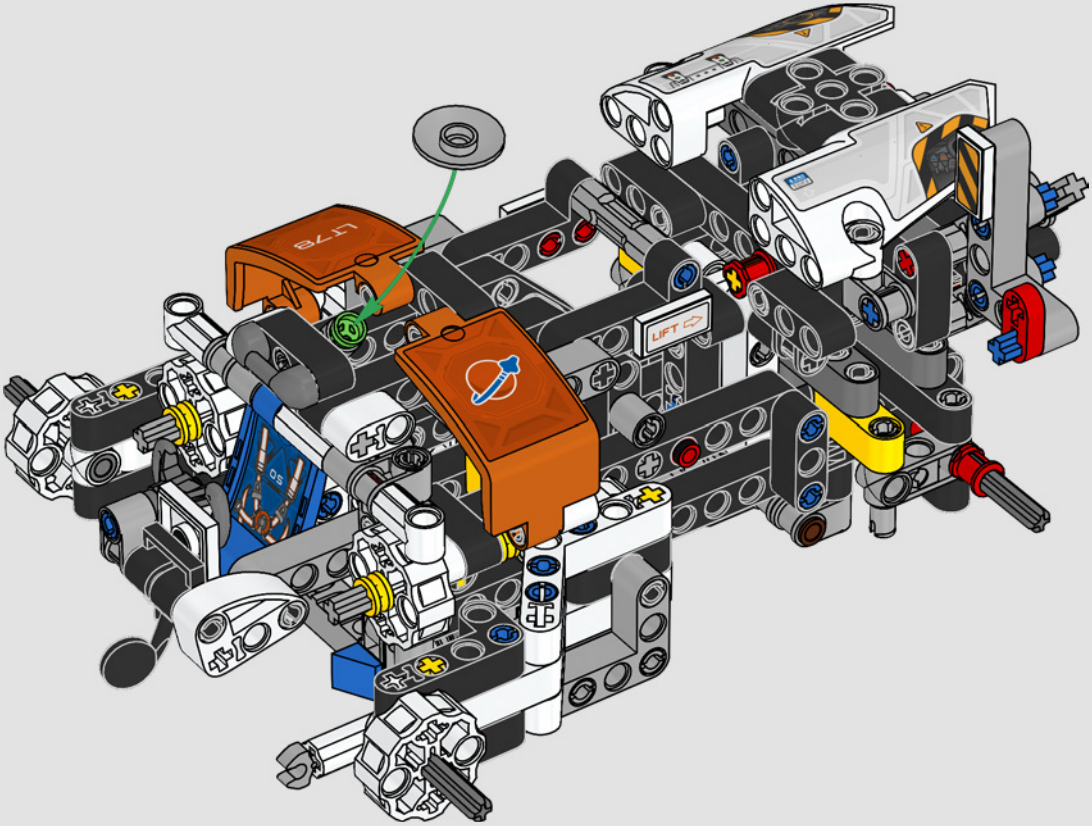

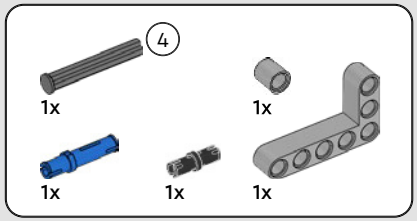

102

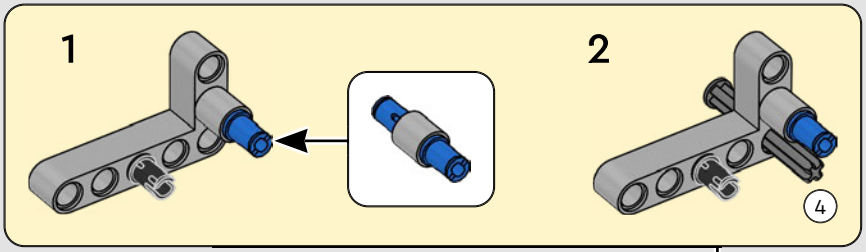

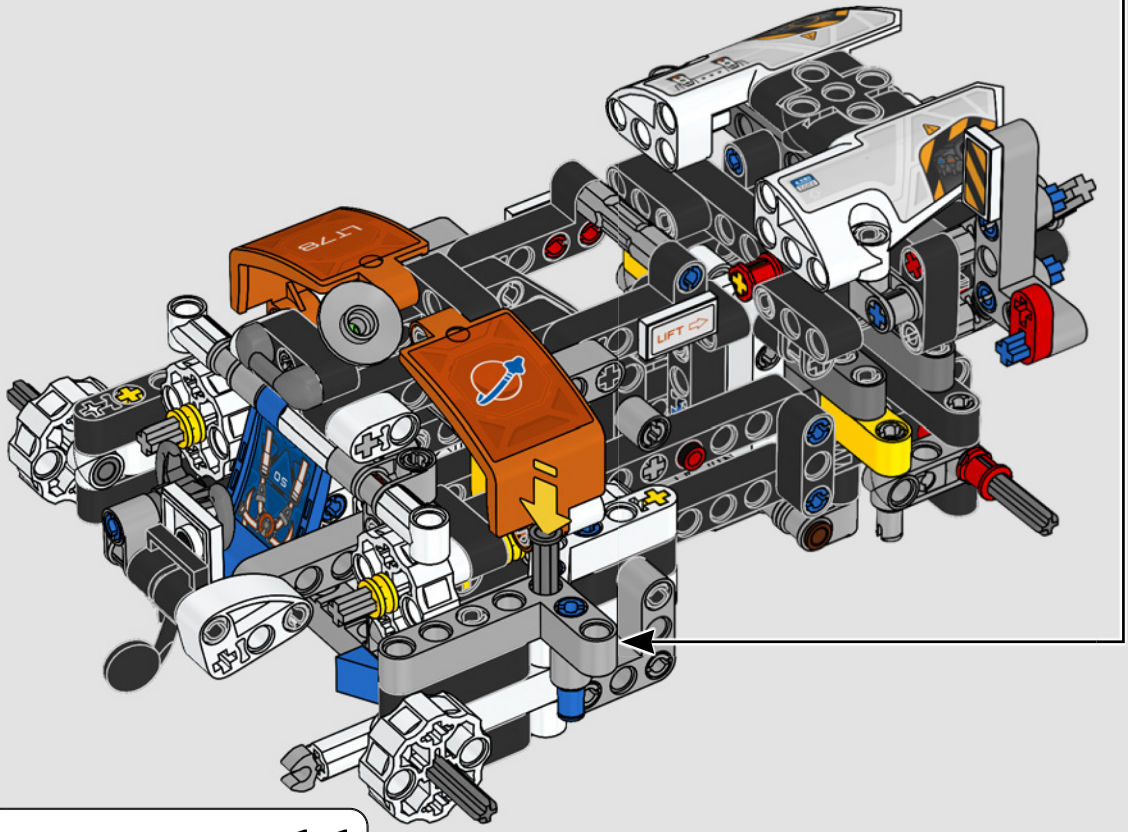

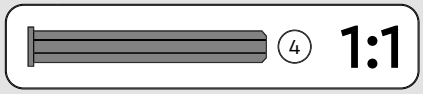

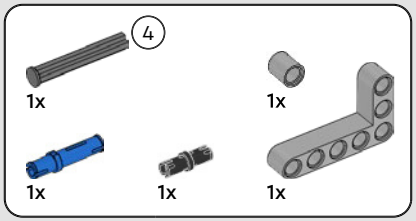

103

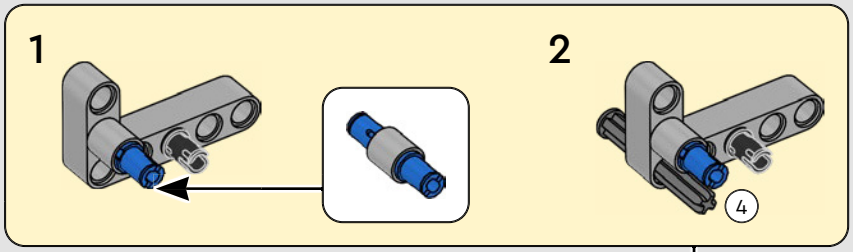

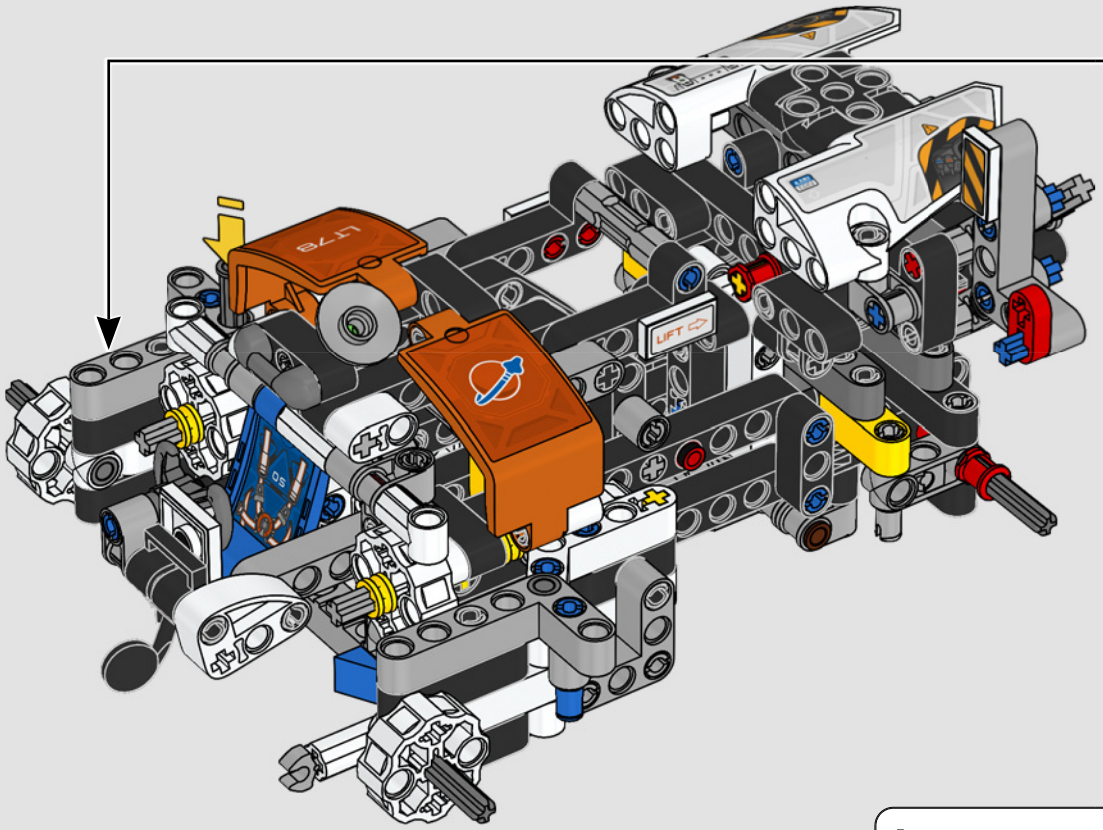

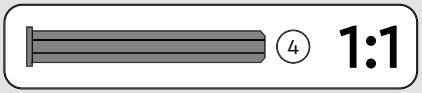

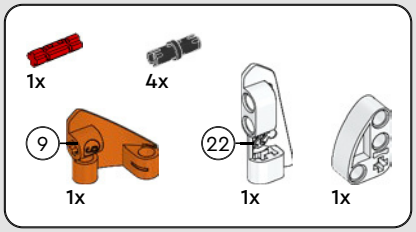

104

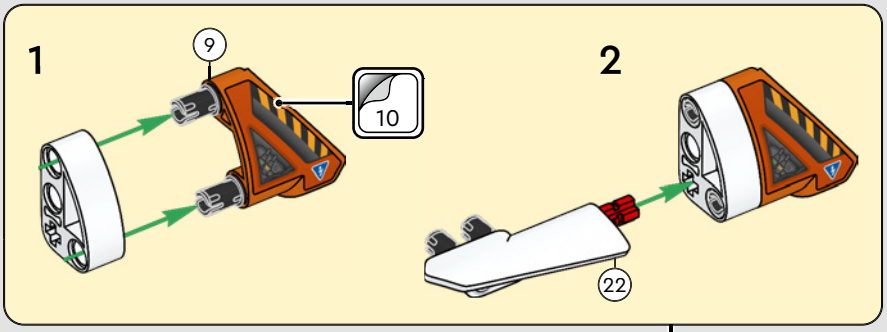

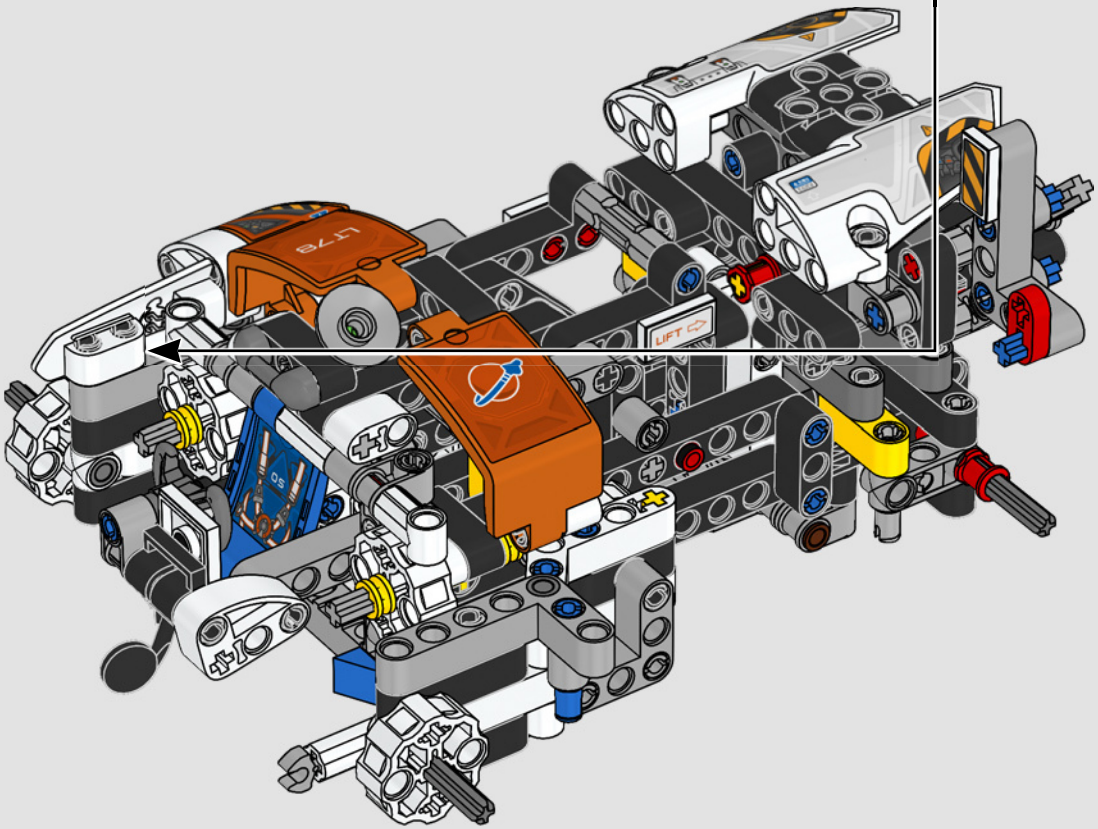

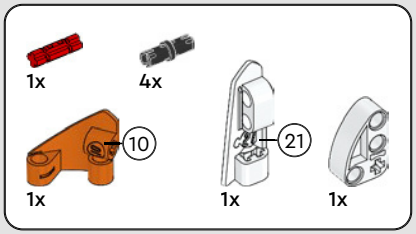

105

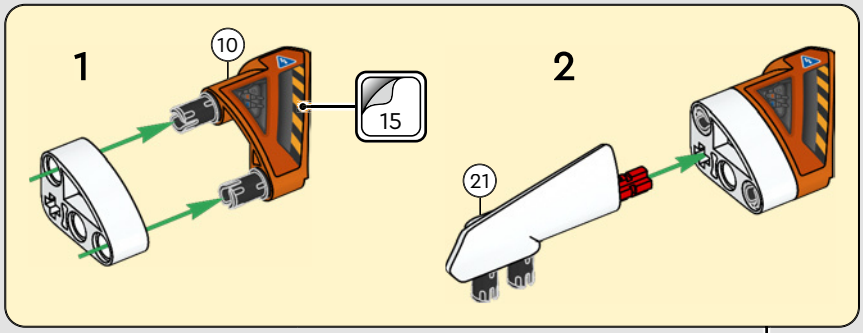

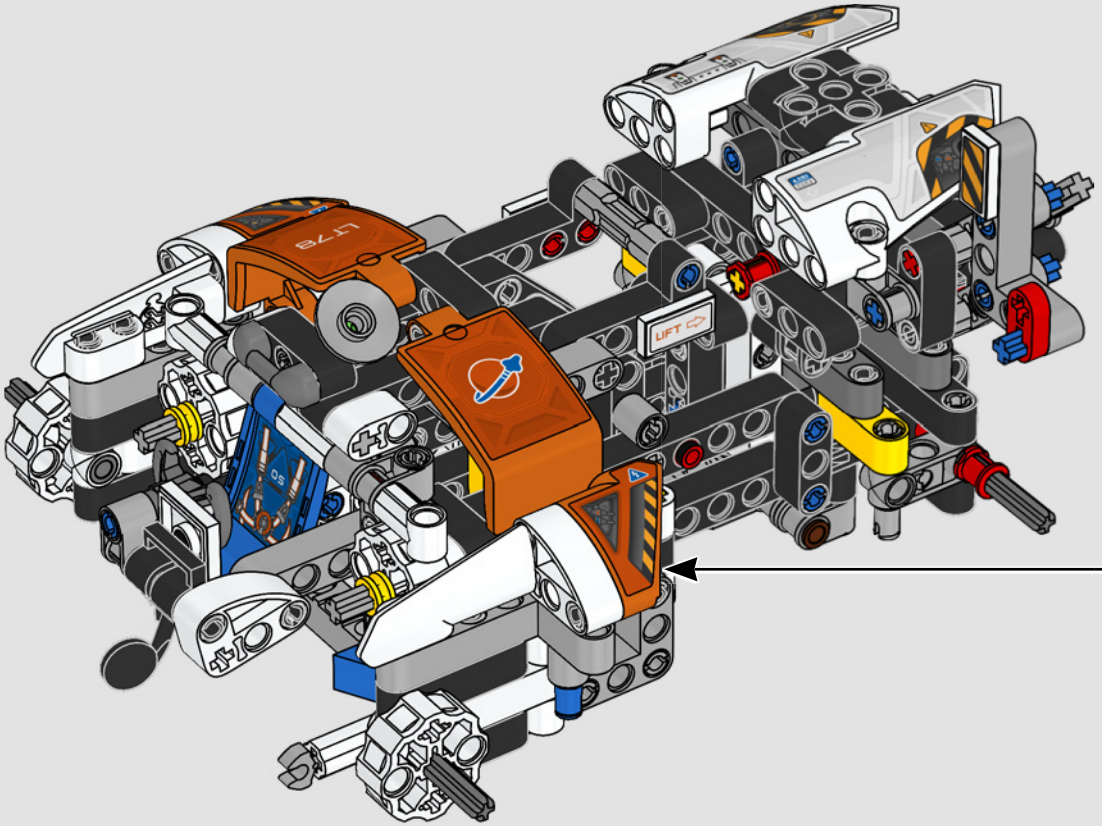

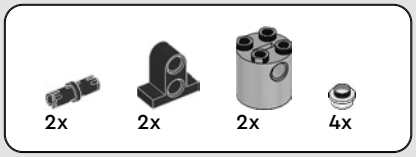

106

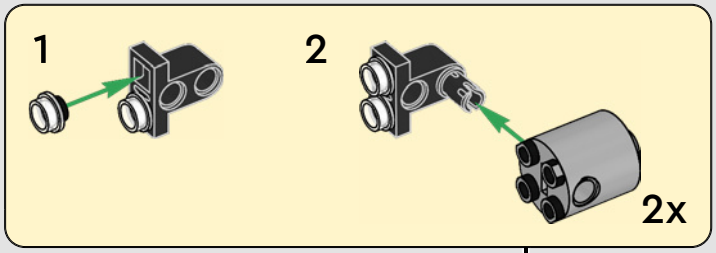

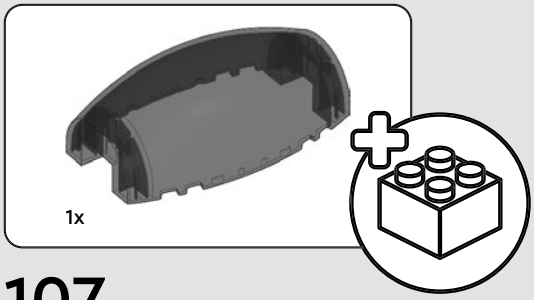

107

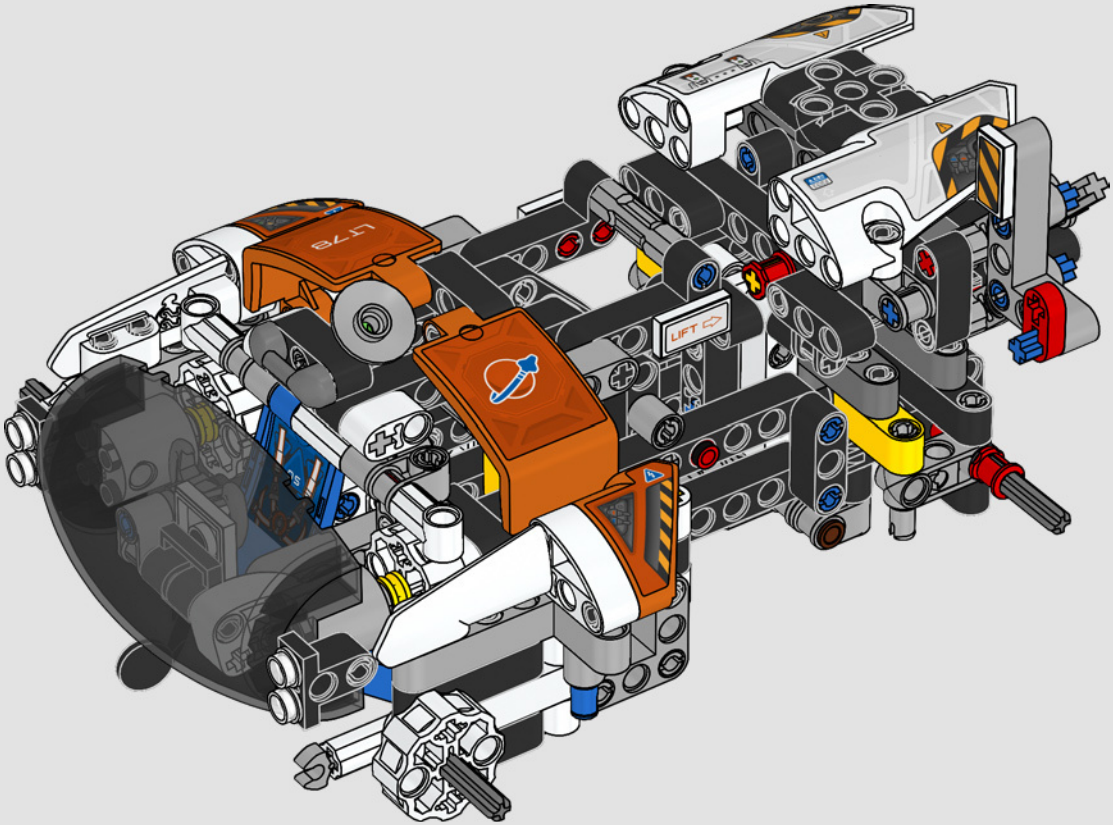

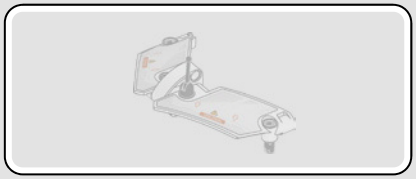

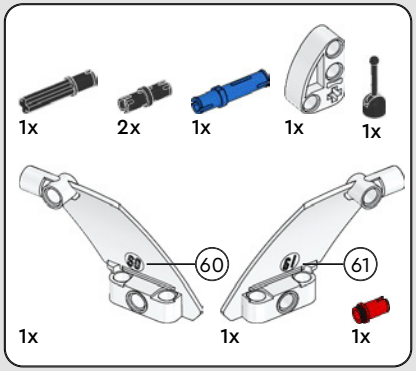

108

1

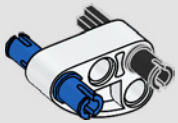

2

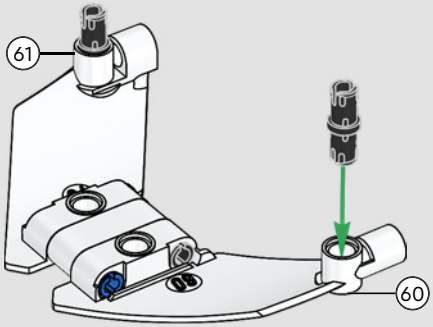

3

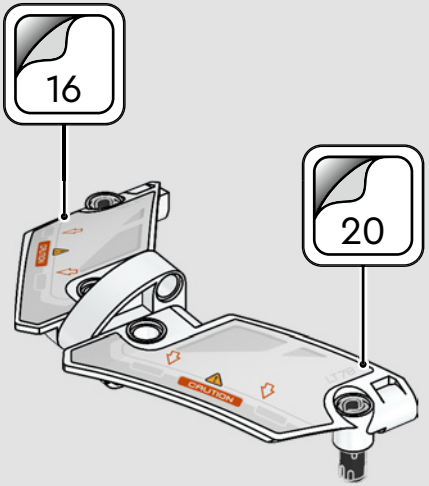

4

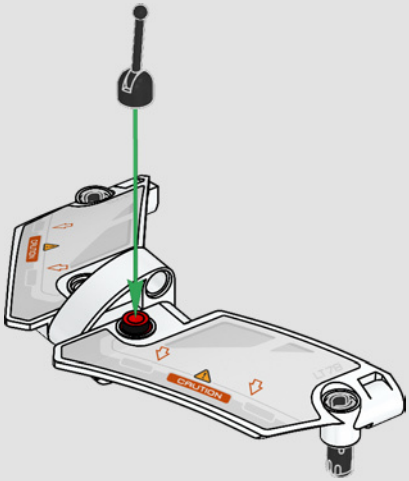

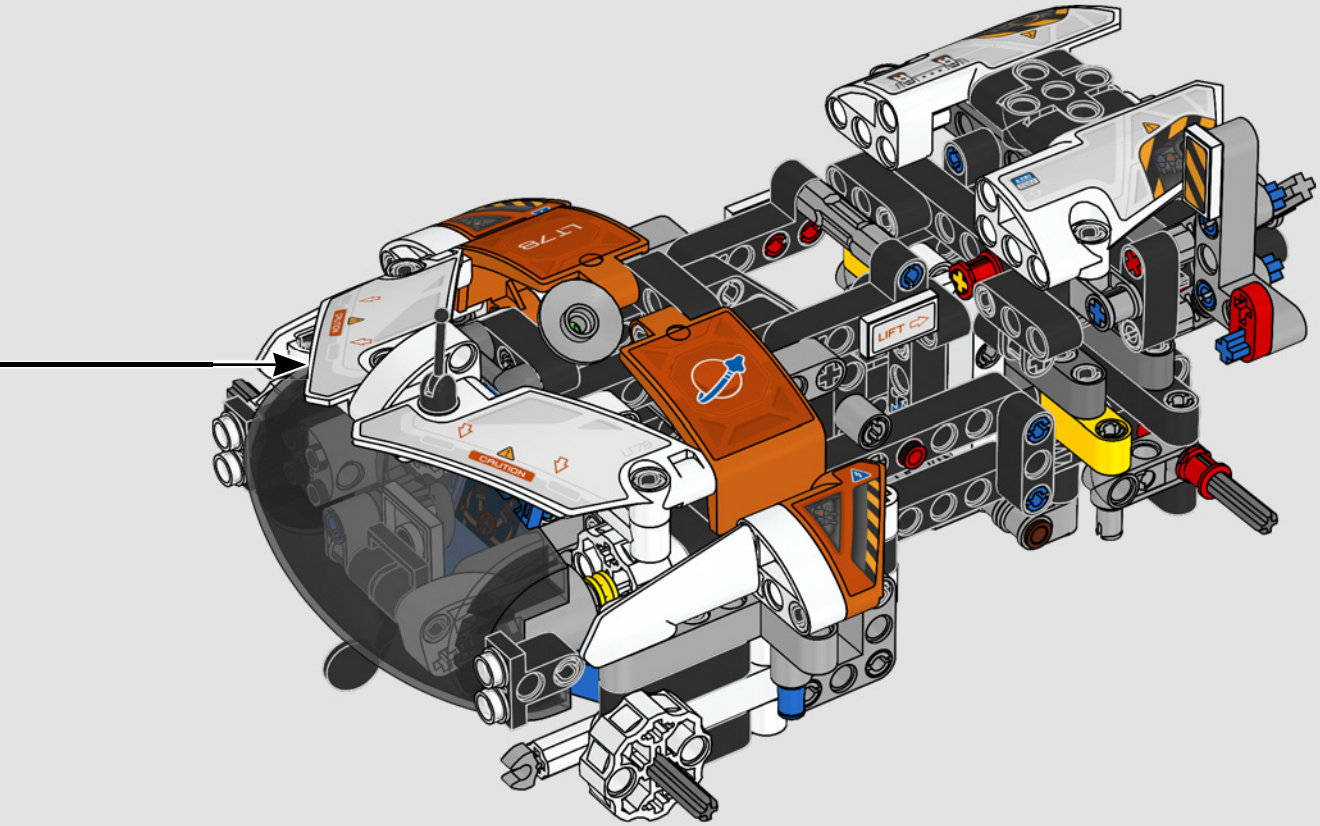
LIFT
CAUTION

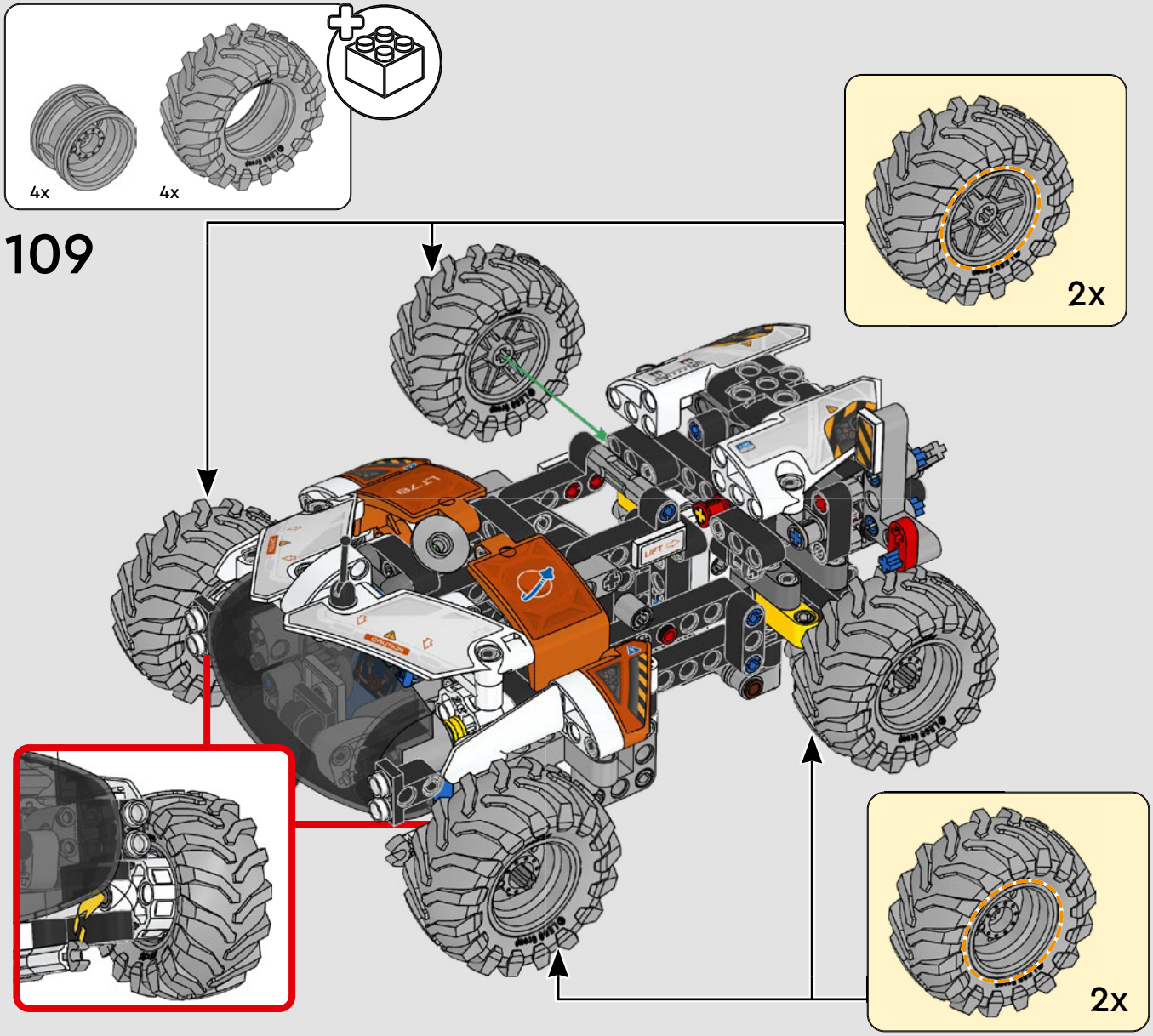
4x
4x
109
2x
2x

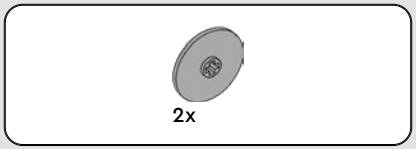

110

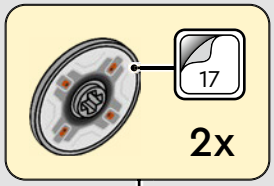

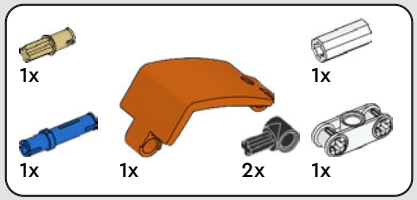

111

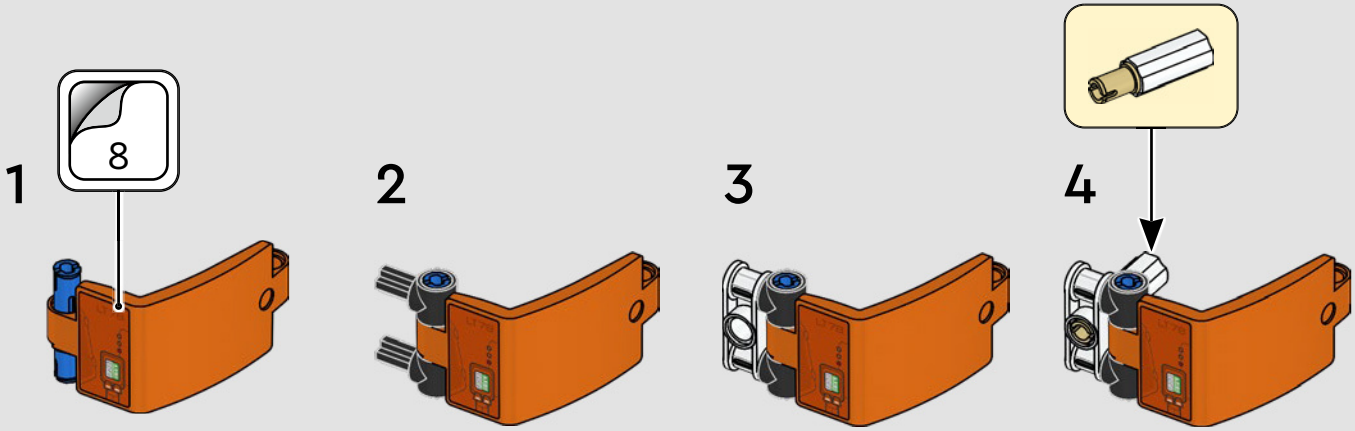

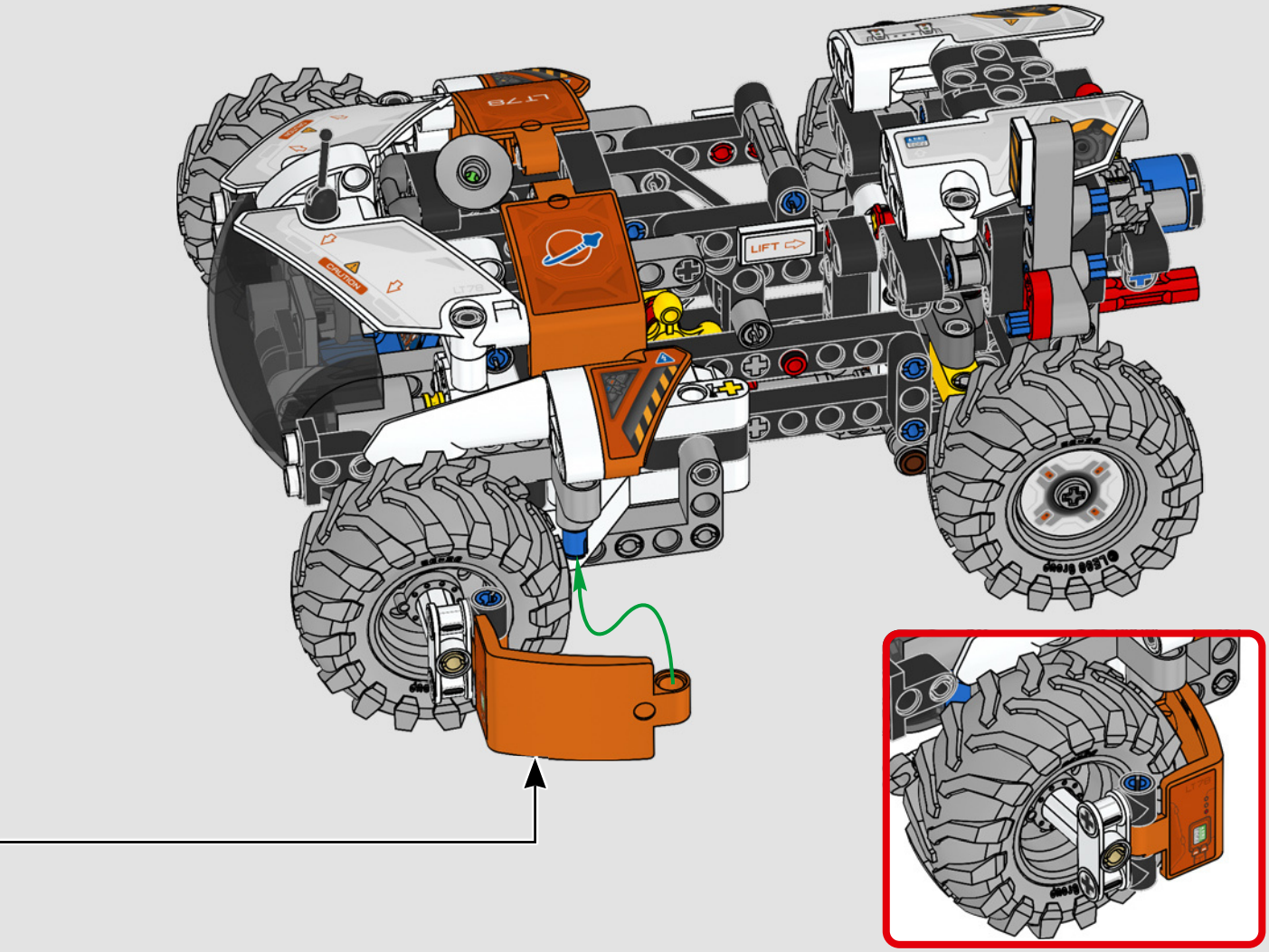
LT79
LIFT
CAUTION

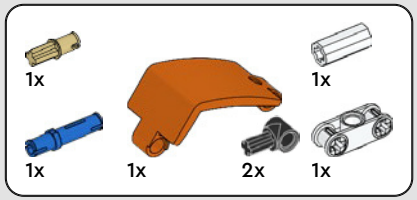

112

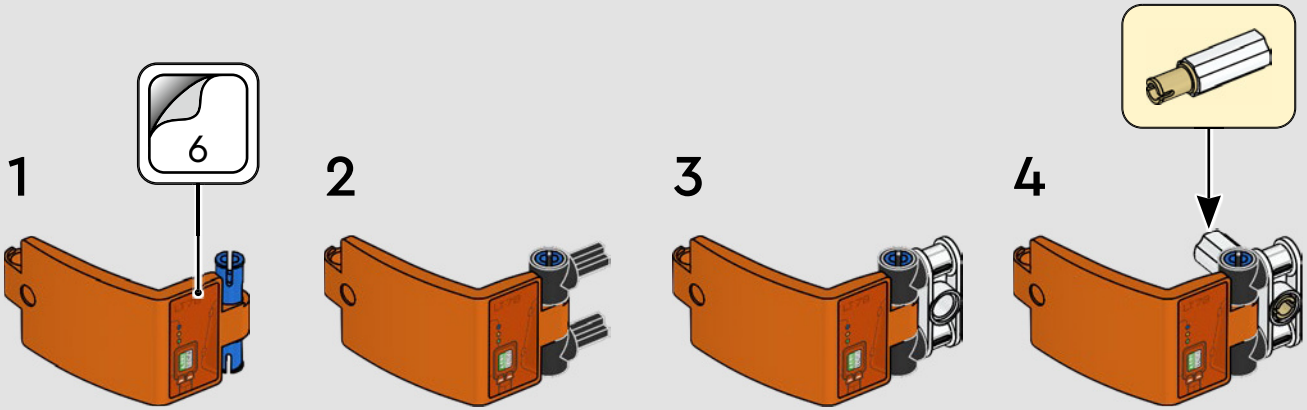

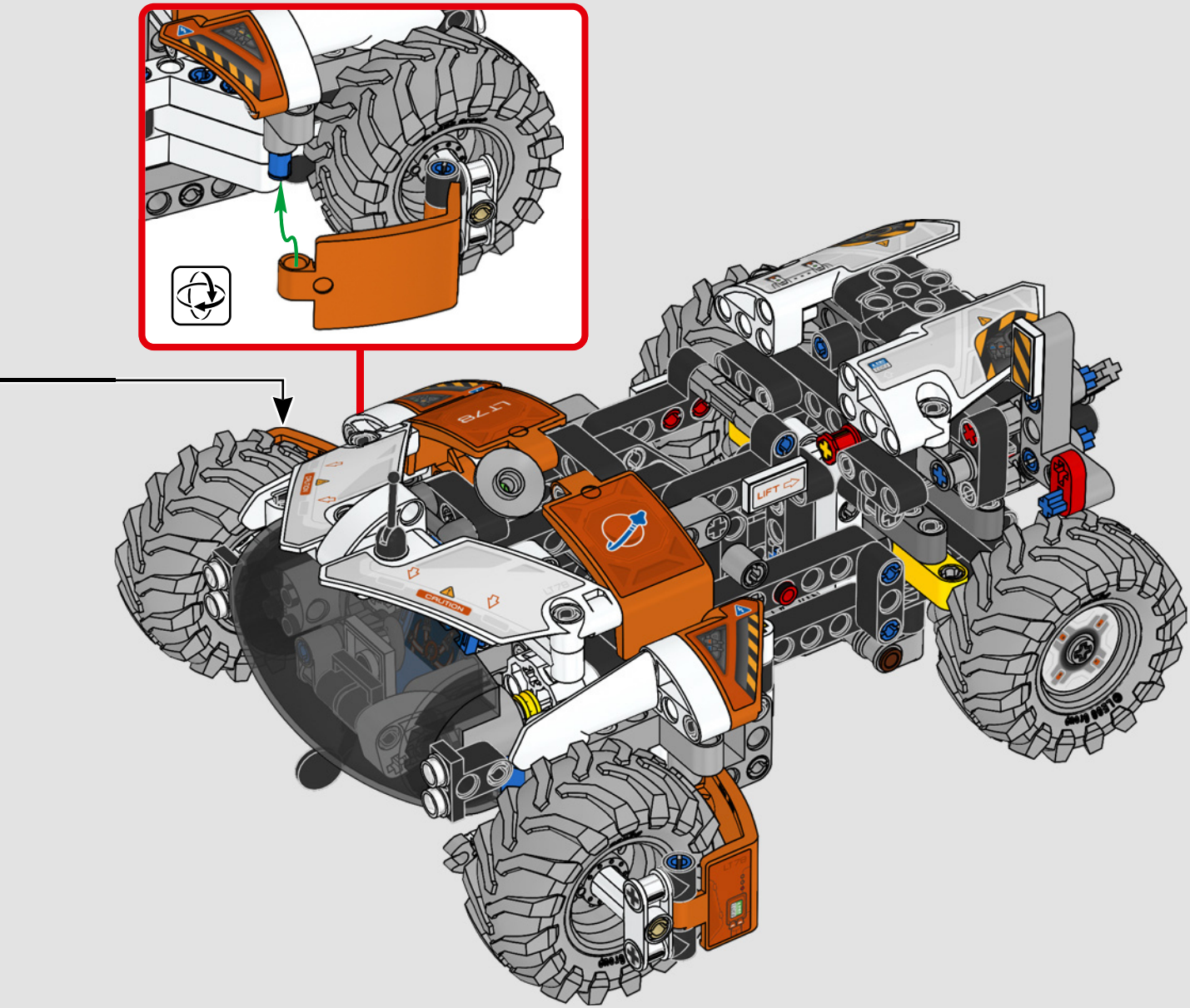
LT78
LIFT
CAUTION

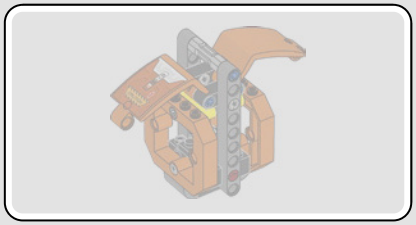

113

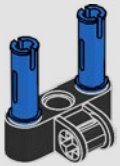

114

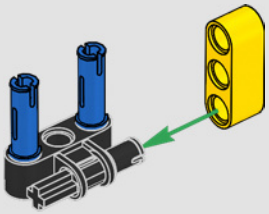

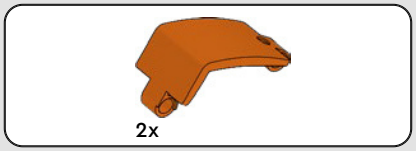

115

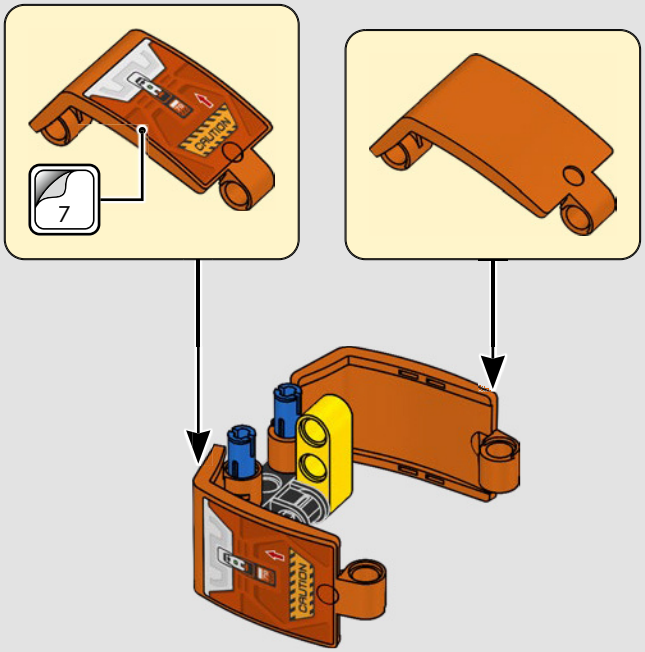

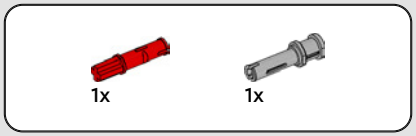

116

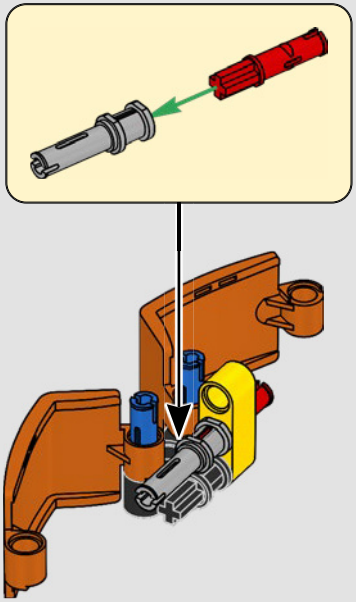

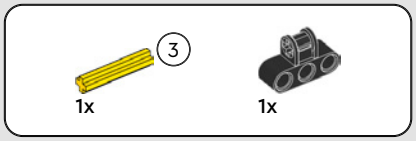

117

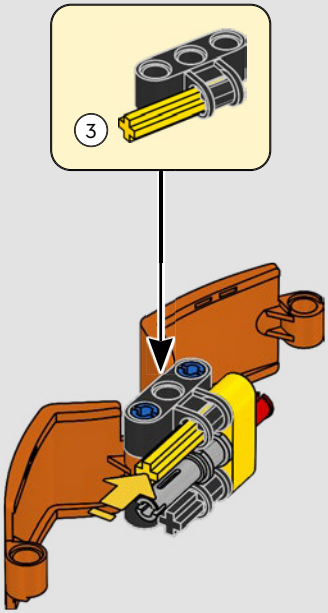

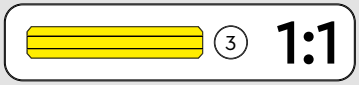

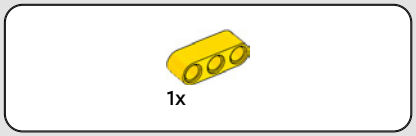

118

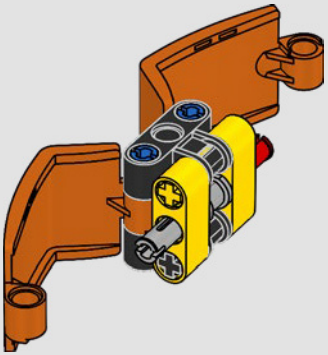

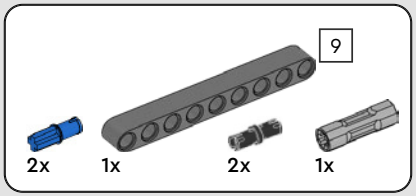

119

1

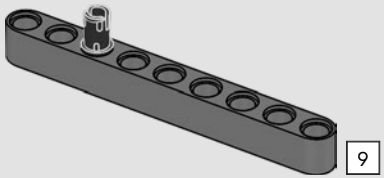

2

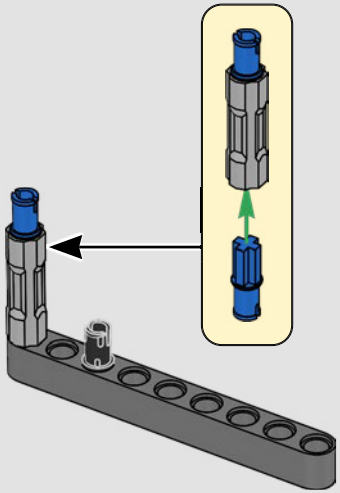

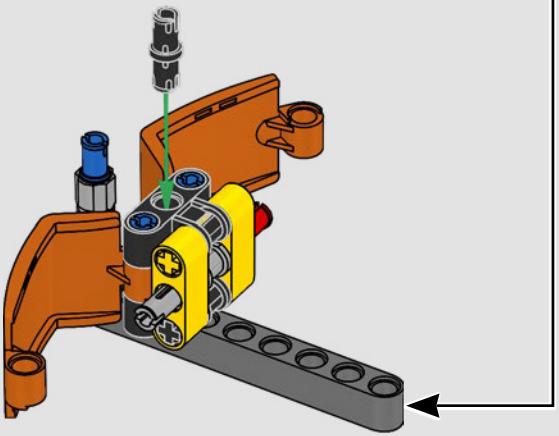

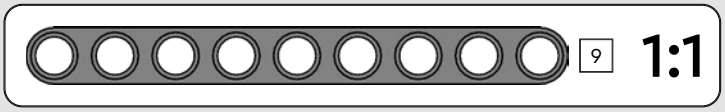

120

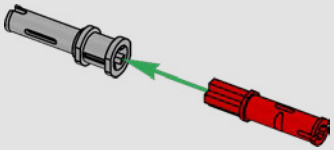

121

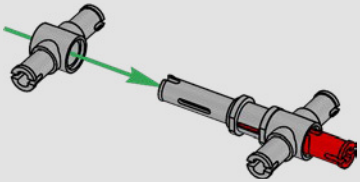

122

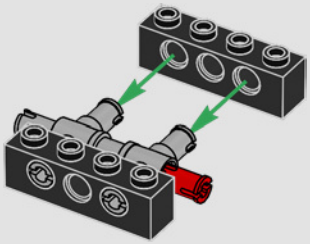

2x

123

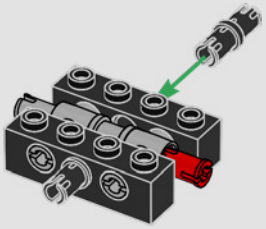

1x

124

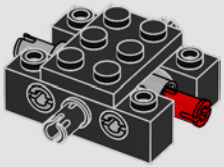

125

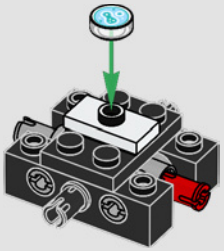

126

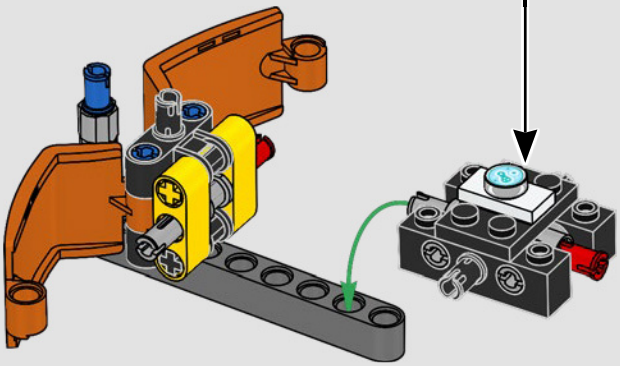

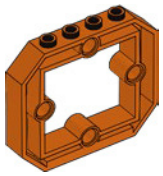

2x

127

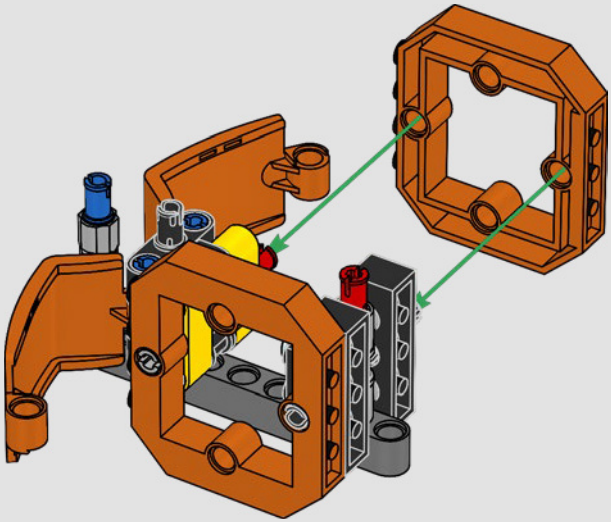

128

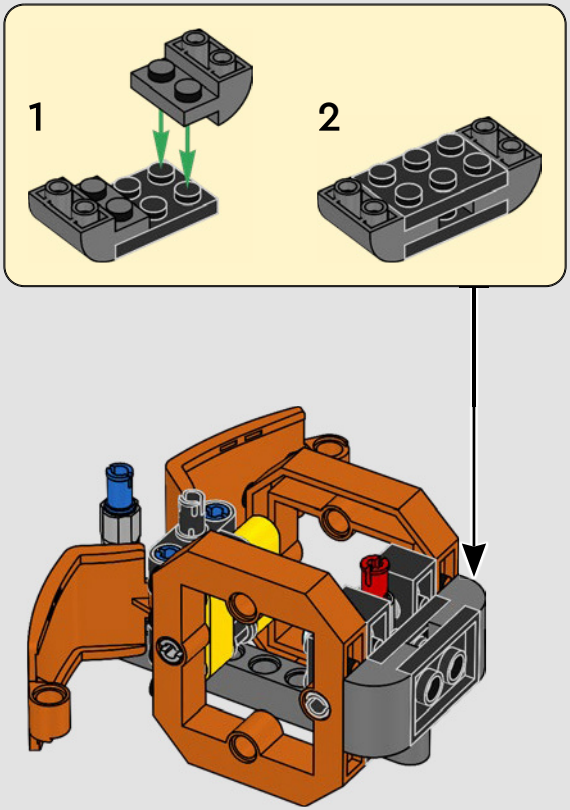

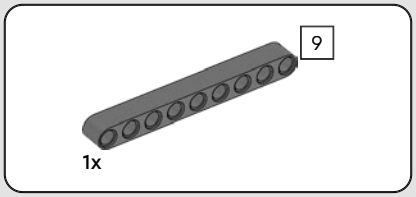

129

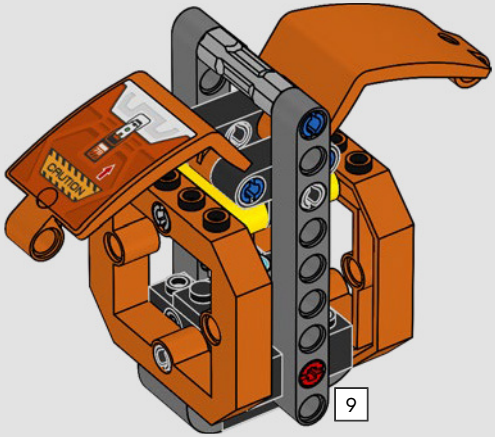

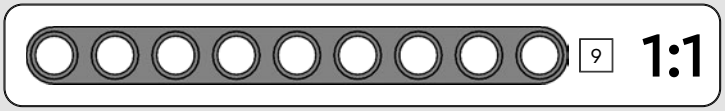

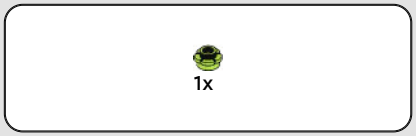

130

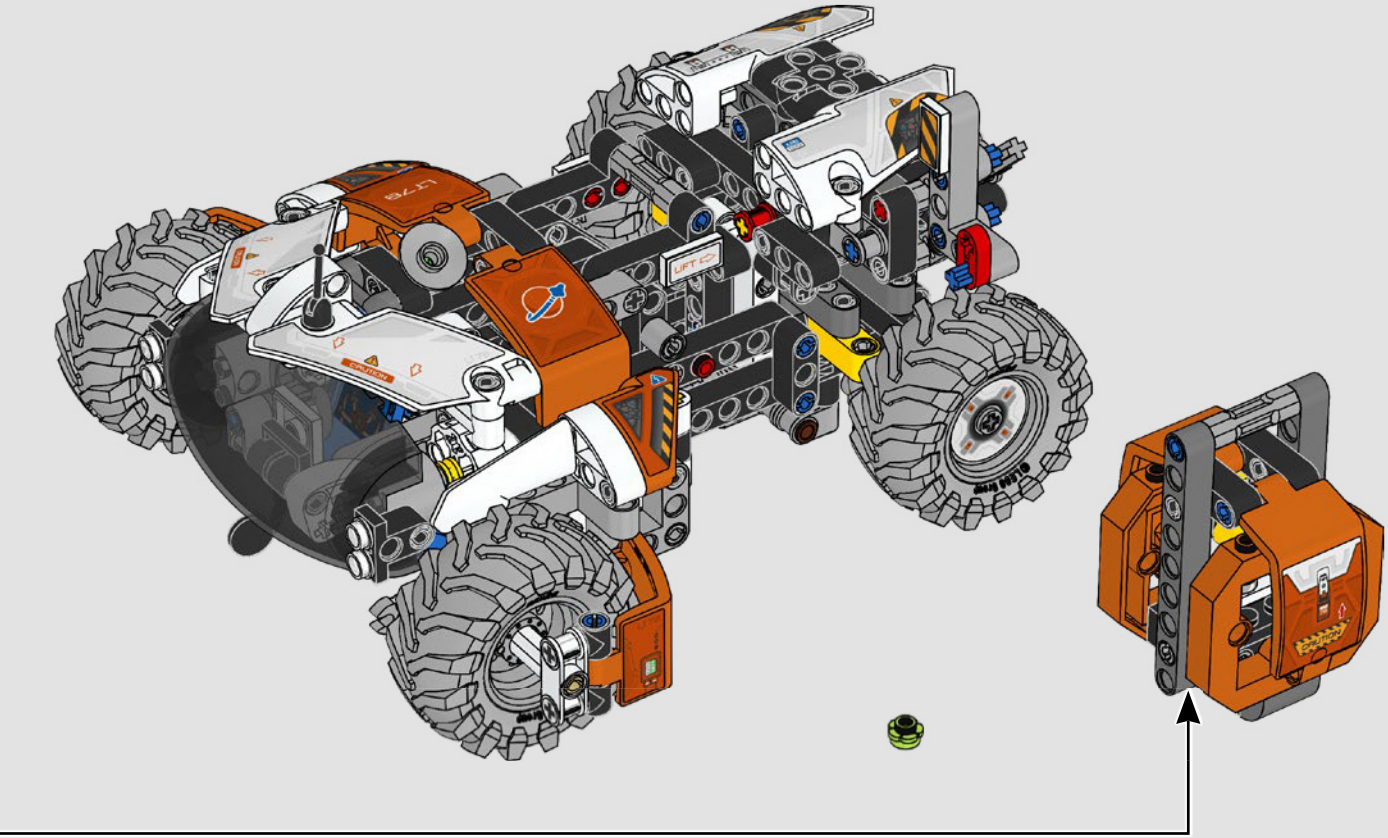

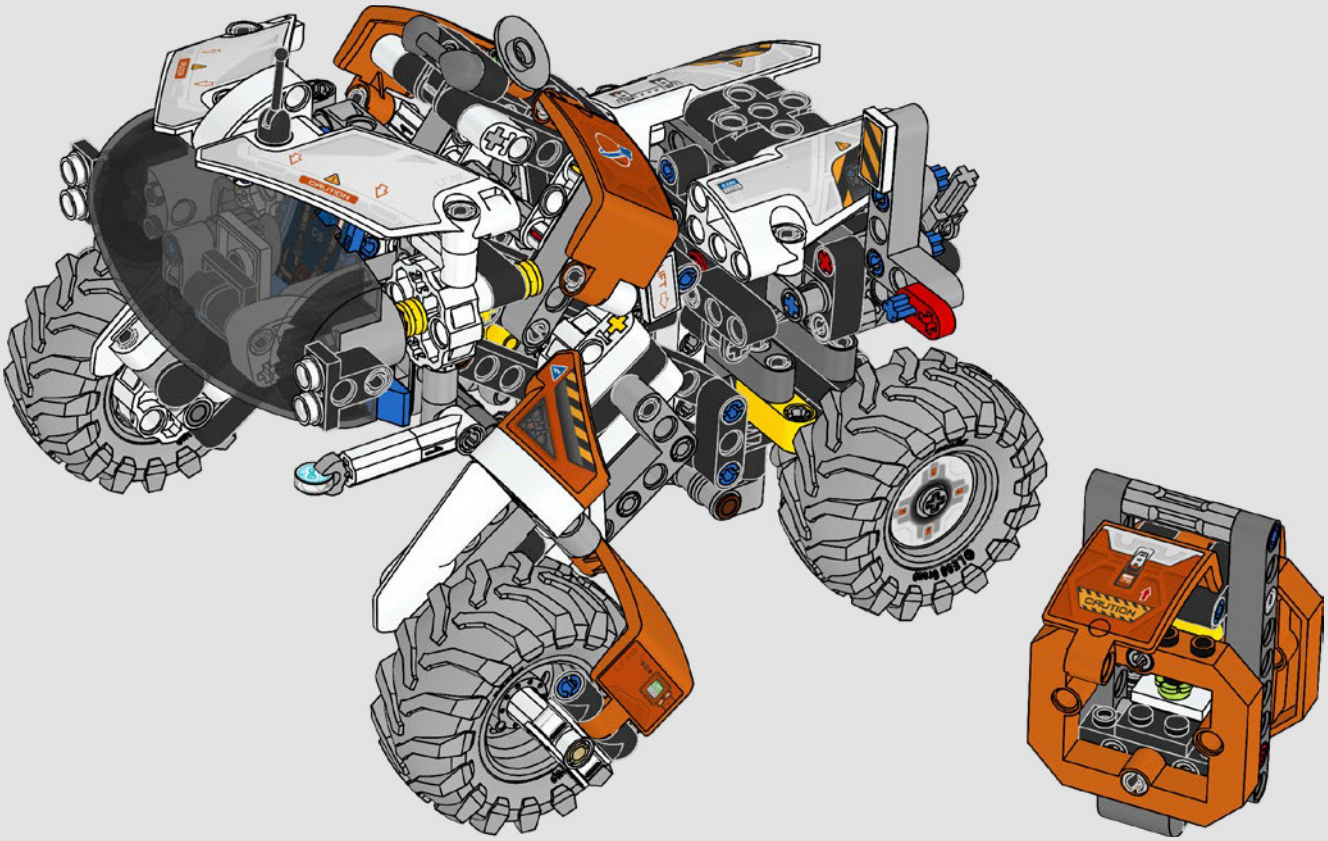
CAUTION

LEGO TECHNIC™

link.bricks.plus/
space-kids

SPACE
42181
42179
42178
42180
LT80
Space
Weltraum
L'espace
Spazio
Espacio
Espaço
太空
Kosmos
Vesmír
Világűr
Spațiu
Космос
Kosmoss
Erdvė

8x
6332573

22
1x
6343987

21
1x
6330084

5x
6265135

5x
6345327

5x
6212049

1x
6051511

3x
306901

2x
6257450

7x
6276981

6x
6263181

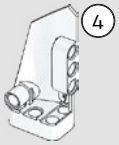
4
1x
4547582

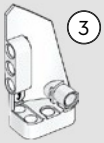
3
1x
4547581

1x
6156667

5
2x
4249021

6x
6278132

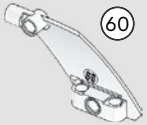
60
1x
6394079

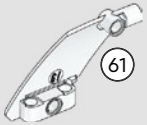
61
1x
6394077

1x
6273211

4
4x
6129995

11x
6271820

14x
6378120

3x
6360104

1x
6371442

6x
4142865

3x
6209519

2x
4666579

2x
4504380

17x
4206482

1x
614323

33x
6299413

1x
6268009

1x
6284189

3
6x
6130007

5x
6271167

5x
4153707

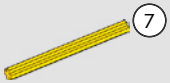
7
5x
6130009

1x
73587

1x
4177431

59x
6279875

1x
6070695

7x
6253260

2x
4144024

1x
281726

10x
6089119

3x
4552347

10x
6362991

3x
6477712

1x
6265644

3x
302126

9x
6271825

2x
370126

1x
6168638

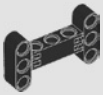
2x
6390379

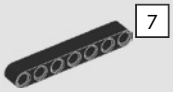
7
5x
4495935

2x
6271152

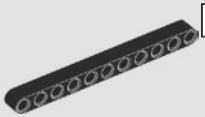
11
6x
6029578

1x
6384069

4x
6240030

1x
6221464

1x
6209692

3
2x
6135494

5
3x
6159763

1x
6439041

2x
6321303

8x
6183784

10x
6261375

2x
6310181

1x
4211512

9x
6282142

1x
6469530

2x
4667578

4x
6321747

3x
4211536

5x
6282158

3x
6273212

1x
6335279

2x
6313453

2x
6331574

5
7x
4211639

4x
4297210

10x
4211713

4x
6471479

1x
4539880

1x
6396480

1x
6301284

1x
6475314

1x
6431478

4
6x
6083620

9
5x
4645730

2x
6445057

2x
6271876

1x
4210676

2x
6273715

9
1x
6472387

10
1x
6472388

1x
6474470

2x
6468285

6x
6476621

YOU COULD

WIN

Scan this QR code or go to **LEGO.COM/PRODUCTFEEDBACK** and give us your short feedback about this LEGO® set for a chance to win a cool LEGO prize.

Terms and Conditions apply*

EN: YOU COULD WIN. Terms and Conditions apply* **DE: Du könntest GEWINNEN.** Es gelten die Teilnahmebedingungen* **FR: Tu pourrais GAGNER.** Des conditions s'appliquent* **IT: Potresti VINCERE tu.** Termini e condizioni sono applicabili* **ES: Puedes GANAR.** Aplican términos y condiciones* **PT: Poderá GANHAR.** Aplicam-se termos e condições* **ZH:** 轻松获奖. 条款和条件适用* **PL: Szansa na WYGRANĄ.** Obowiązują warunki korzystania* **CS: Máte šanci VYHRÁT.** Platí všeobecné smluvní podmínky* **SK: Máte šancu VYHRAŤ.** Platia všeobecné zmluvné podmienky* **HU: TE IS NYERHETSZ.** Felhasználási feltételek érvényesek* **RO: Ai putea CÂȘTIGA.** Se aplică termeni și condiții* **BG: Можете да СПЕЧЕЛИТЕ.** Има определени правила и условия* **LV: Tu vari LAIMĒT.** Ir spēkā noteikumi un nosacījumi.* **ET: Sul on võimalus VÕITA.** Kehtivad tingimused* **LT: Jūs galite LAIMĖTI.** Taikomos sąlygos*

**LEGO.com/productfeedback-terms*

LEGO and the LEGO logo are trademarks of the LEGO Group. ©2024 The LEGO Group.

6507729